SERVICE MANUAL

D900T

notebook

Notebook Computer

D900T

Service Manual

Notice

The company reserves the right to revise this publication or to change its contents without notice. Information contained herein is for reference only and does not constitute a commitment on the part of the manufacturer or any subsequent vendor. They assume no responsibility or liability for any errors or inaccuracies that may appear in this publication nor are they in anyway responsible for any loss or damage resulting from the use (or misuse) of this publication.

This publication and any accompanying software may not, in whole or in part, be reproduced, translated, transmitted or reduced to any machine readable form without prior consent from the vendor, manufacturer or creators of this publication, except for copies kept by the user for backup purposes.

Brand and product names mentioned in this publication may or may not be copyrights and/or registered trademarks of their respective companies. They are mentioned for identification purposes only and are not intended as an endorsement of that product or its manufacturer.

Version 1.0
December 2004

Trademarks

Intel® and **Pentium**® are US registered trademarks of Intel Corporation.
SRS WOW is a trademark of SRS Labs, Inc.
WOW technology is incorporated under license from SRS Labs, Inc.

About this Manual

This manual is intended for service personnel who have completed sufficient training to undertake the maintenance and inspection of personal computers.

It is organized to allow you to look up basic information for servicing and/or upgrading components of the **D900T** series notebook PC.

The following information is included:

Chapter 1, Introduction, provides general information about the location of system elements and their specifications.
Chapter 2, Disassembly, provides step-by-step instructions for disassembling parts and subsystems and how to upgrade elements of the system.
Appendix A, Part Lists
Appendix B, Schematic Diagrams

IMPORTANT SAFETY INSTRUCTIONS

Follow basic safety precautions, including those listed below, to reduce the risk of fire, electric shock and injury to persons when using any electrical equipment:

1. Do not use this product near water, for example near a bath tub, wash bowl, kitchen sink or laundry tub, in a wet basement or near a swimming pool.
2. Avoid using this equipment with a telephone line (other than a cordless type) during an electrical storm. There may be a remote risk of electrical shock from lightning.
3. Do not use the telephone to report a gas leak in the vicinity of the leak.
4. Use only the power cord and batteries indicated in this manual. Do not dispose of batteries in a fire. They may explode. Check with local codes for possible special disposal instructions.
5. This product is intended to be supplied by a Listed Power Unit (DC Output 20V, 9A minimum).

CAUTION

Always disconnect all telephone lines from the wall outlet before servicing or disassembling this equipment.

TO REDUCE THE RISK OF FIRE, USE ONLY NO. 26 AWG OR LARGER, TELECOMMUNICATION LINE CORD

This computer's optical device is a Class I Laser product

Instructions for Care and Operation

The notebook computer is quite rugged, but it can be damaged. To prevent this, follow these suggestions:

1. **Don't drop it, or expose it to shock.** If the computer falls, the case and the components could be damaged.

Do not expose the computer to any shock or vibration. 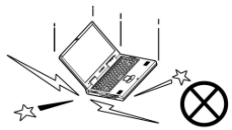	*Do not place it on an unstable surface.*	*Do not place anything heavy on the computer.* 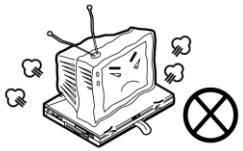

2. **Keep it dry, and don't overheat it.** Keep the computer and power supply away from any kind of heating element. This is an electrical appliance. If water or any other liquid gets into it, the computer could be badly damaged.

Do not expose it to excessive heat or direct sunlight.	*Do not leave it in a place where foreign matter or moisture may affect the system.*	*Don't use or store the computer in a humid environment.*	*Do not place the computer on any surface which will block the vents.* 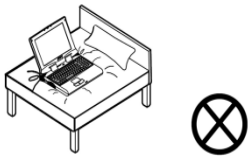

3. **Follow the proper working procedures for the computer**. Shut the computer down properly and don't forget to save your work. Remember to periodically save your data as data may be lost if the battery is depleted.

Do not turn off the power until you properly shut down all programs. 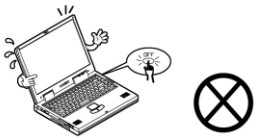	*Do not turn off any peripheral devices when the computer is on.* 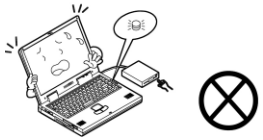	*Do not disassemble the computer by yourself.*	*Perform routine maintenance on your computer.*

4. **Avoid interference.** Keep the computer away from high capacity transformers, electric motors, and other strong magnetic fields. These can hinder proper performance and damage your data.

5. **Take care when using peripheral devices**.

Use only approved brands of peripherals. 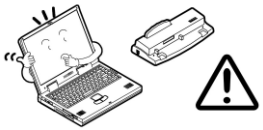	*Unplug the power cord before attaching peripheral devices.* 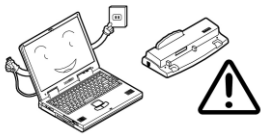

Power Safety

The computer has specific power requirements:

- Only use a power adapter approved for use with this computer.
- Your AC adapter may be designed for international travel but it still requires a steady, uninterrupted power supply. If you are unsure of your local power specifications, consult your service representative or local power company.
- The power adapter may have either a 2-prong or a 3-prong grounded plug. The third prong is an important safety feature; do not defeat its purpose. If you do not have access to a compatible outlet, have a qualified electrician install one.
- When you want to unplug the power cord, be sure to disconnect it by the plug head, not by its wire.
- Make sure the socket and any extension cord(s) you use can support the total current load of all the connected devices.
- Before cleaning the computer, make sure it is disconnected from any external power supplies.

Power Safety Warning

Before you undertake any upgrade procedures, make sure that you have turned off the power, and disconnected all peripherals and cables (including telephone lines). It is advisable to also remove your battery in order to prevent accidentally turning the machine on.

Do not plug in the power cord if you are wet.	*Do not use the power cord if it is broken.* 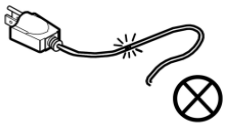	*Do not place heavy objects on the power cord.* 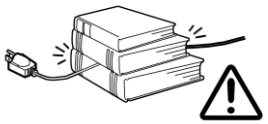

Battery Precautions

- Only use batteries designed for this computer. The wrong battery type may explode, leak or damage the computer.
- Recharge the batteries using the notebook's system. Incorrect recharging may make the battery explode.
- Do not try to repair a battery pack. Refer any battery pack repair or replacement to your service representative or qualified service personnel.
- Keep children away from, and promptly dispose of a damaged battery. Always dispose of batteries carefully. Batteries may explode or leak if exposed to fire, or improperly handled or discarded.
- Keep the battery away from metal appliances.
- Affix tape to the battery contacts before disposing of the battery.
- Do not touch the battery contacts with your hands or metal objects.

Battery Disposal

The product that you have purchased contains a rechargeable battery. The battery is recyclable. At the end of its useful life, under various state and local laws, it may be illegal to dispose of this battery into the municipal waste stream. Check with your local solid waste officials for details in your area for recycling options or proper disposal.

Caution

Danger of explosion if battery is incorrectly replaced. Replace only with the same or equivalent type recommended by the manufacturer. Discard used battery according to the manufacturer's instructions.

Related Documents

You may also need to consult the following manual for additional information:

User's Manual on CD
This describes the notebook PC's features and the procedures for operating the computer and its ROM-based setup program. It also describes the installation and operation of the utility programs provided with the notebook PC.

Contents

Introduction 1-1

Overview 1-1
Specifications 1-2
External Locator - Top View with LCD Panel Open 1-5
External Locator - Front & Rear Views 1-6
External Locator - Right & Left Side Views 1-7
External Locator - Bottom View 1-8
Mainboard Overview - Top (Key Parts) 1-9
Mainboard Overview - Bottom (Key Parts) 1-10
Mainboard Overview - Top (Connectors) 1-11
Mainboard Overview - Bottom (Connectors) 1-12

Disassembly 2-1

Overview 2-1
Maintenance Tools 2-2
Connections 2-2
Maintenance Precautions 2-3
Cleaning 2-3
Disassembly Steps 2-4
Removing the Battery 2-5
Removing the Hard Disk Drive 2-6
Removing the System Memory (RAM) 2-8
Removing the Optical Device 2-10
Removing the Processor 2-11
Removing the PCI Express Video Card 2-13
Removing the Keyboard & Shielding Plate 2-14
Removing the Modem Module 2-15
Removing the Wireless LAN/WLAN & Bluetooth Combo Module 2-16
Removing the TV Tuner 2-17
Removing the Camera Module 2-18

Part Lists A-1

Part List Illustration Location A-2
Top (D900T) A-3
Bottom (D900T) A-4
LCD (D900T) A-5
Toshiba DVD-ROM Drive (D900T) A-6
QSI Combo Drive (D900T) A-7
DVD Dual Drive (D900T) A-8
Hard Disk Drive (D900T) A-9

Schematic Diagrams.....B-1

System Block Diagram B-2
Clock Generator B-3
CPU-1 Host/Power B-4
CPU-2 GTL+ / GND B-5
GMCH-1 Host/ PCI-E/ DMI B-6
GMCH-2 DDR2 .....B-7
GMCH-3 PWR / GND B-8
DDR2 DIMM-A B-9
DDR2 DIMM-B B-10
DDR2 Terminator B-11
ICH6-1 .....B-12
ICH6-2 PWR / GND B-13
VGA Daughter Connector B-14
DVI / TV-Out / Video-In Con B-15
Panel Con / LED Indicator B-16
PCMCIA TI1410 .....B-17
PCMCIA Power / Fan Con B-18
PCI 1394a TI TSB43AB22 .....B-19

GLAN RTL110SBL B-20
SATA RAID PDC20378 ..... B-21
LPC Super I/O NS87393 ..... B-22
LPT / COM Port CON / Thermistor B-23
LPC H8 ..... B-24
CODEC ALC880 ..... B-25
Audio Jack & ADJ Power B-26
Audio DJ BBVL+ Controller B-27
USB / CR / CCD Con / SRS B-28
Mini-PCI / NC / MDC / BT Con B-29
VCORE B-30
DDR Power B-31
System Power B-32
Charger B-33
Audio Board B-34
Audio DJ Board B-35
CD-ROM Board B-36
Click Board B-37
Switch Board B-38

1: Introduction

Overview

This manual covers the information you need to service or upgrade the ***D900T*** series notebook computer. Information about operating the computer (e.g. getting started, and the *Setup* utility) is in the *User's Manual*. Information about drivers (e.g. VGA & audio) is also found in *User's Manual*. That manual is shipped with the computer.

Operating systems (e.g *Windows 2000, Windows XP, UNIX*, etc.) have their own manuals as do application software (e.g. word processing and database programs). If you have questions about those programs, you should consult those manuals.

The ***D900T*** series notebook is designed to be upgradeable. See ***"Disassembly" on page 2 - 1*** for a detailed description of the upgrade procedures for each specific component. Please note the warning and safety information indicated by the "🔔" symbol.

The balance of this chapter reviews the computer's technical specifications and features.

Specifications

Feature	Specification
Processor Types	Intel® Pentium® 4 520/ 530/ 540/ 550/ 560 Processor with HT Technology LGA775 Package (775-pin) (90nm) 90 Nanometer Process Technology, 1024KB On-Die L2 Cache & 800MHz Front Side Bus - **2.8/ 3.0/ 3.2/ 3.4/ 3.6** GHz
Core Logic	Intel 915P + ICH6
Security	Security (Kensington® Type) Lock Slot BIOS Password
Memory	Two 64-bit wide **DDR-II** (**DDR2**) Data Channels **Four** 200 Pin DDR SODIMM Sockets Expandable up to **4GB** (Compatible with 1024MB, 512MB, 256MB **DDR-II** (**DDR2**) - **400/ 533** Modules) **Memory Available** Even if you have 4GB of RAM in the computer, the POST (at Startup) or System (Windows) Control Panel, will show 2814GB of RAM available to the system. This is due to 1GB of RAM being reserved for the PCI space, and further RAM is reserved for the BIOS.
BIOS	One 512KB Flash ROM Phoenix BIOS
LCD	17" WXGA (1440 * 900) / WSXGA+ (1680 * 1050) TFT LCD
Display	NVIDIA NV41M High Performance Chip 256MB **DDR-II (DDR2**) Video RAM On Board 128-bit Graphics Engine PCI Express * 16 Fully DirectX® 9 Support Modular Design

Feature	Specification	
Storage Options	One External USB 1.44Mb Floppy Disk Drive One Changeable Primary 2.5" 9.5mm (h) Hard Disk Drive One Changeable Secondary 2.5" 9.5mm (h) Hard Disk Drive **RAID** (**Option**) Supports Serial ATA HDD RAID 0, RAID 1, HDD Fault Tolerance System (**Optional**) One Changeable Primary Optical Device Bay - 12.7 mm (h) for Optical CD/DVD Device Drive Options (see***"Optional" on page 1 - 4***) One Changeable Secondary Optical Device Bay - 12.7 mm (h) for Optical CD/DVD Device Drive Options (see***"Optional" on page 1 - 4***)	
Audio	SRS **WOW** Surround Sound Technology inside Inter Azalia Compliant Interface 3D Stereo Enhanced Sound System Virtual 8-Channel Sound System Compatible with Sound-Blaster PRO™	S/PDIF Digital Output (5.1 CH) Built-In Microphone 4 * Built-In Speakers Built-In Sub Woofer Built-In Audio DJ Console for Music CD (MP3 Format Compatible)
Keyboard & Pointing Device	Full Size Winkey Keyboard with Numeric Keypad	Built-In TouchPad (Scroll Functionality Included)
PCMCIA	One Type II PCMCIA 3.3V/5V Socket	
I/O Ports	Four USB 2.0/1.1 Ports Two Mini-IEEE1394a Ports One S-Video-Out Jack for TV & HDTV Output One Serial Port One Parallel Port (LPT1) Supporting ECP/EPP One Infrared Transceiver (IrDA 1.1/FIR/SIR/ASKIR) One DVI-Out Port One PS/2 Port (Mouse/Keyboard) One Headphone-Out Jack One Microphone-In Jack	One S/PDIF Out Jack One RJ-11 Jack (Modem) One RJ-45 Jack (Local Area Network) One DC-In Jack One Line-In Jack for Audio Input One CATV-In Jack (Functions with **Optional** TV Tuner Module) One S-Video-In Jack for Video Input (Functions with **Optional** TV Tuner Module)

Feature	Specification	
Communication	Infrared Transceiver Infrared Transfer 1cm ~ 1M Operating Distance 115.2K bps SIR 4M bps FIR IrDA 1.1 Compliant 10/100/1000 BASE-TX Fast Ethernet LAN on board Integrated V.90/56K Azalia Modem (V.92 Compliant)	802.11b/g Mini-PCI Wireless LAN Module (**Optional**) Bluetooth™ Class II V1.2 & 802.11b/g Wireless LAN Mini-PCI interface Combo Module (**Optional**) 300K Pixel Video Camera Module (**Optional**)
Card Reader	Embedded 7-in-1 Card Reader (MS/ MS Pro/ SD/ MMC/ CF/ Micro Drive/ SM)	
Power Management	Supports ACPI 2.0 Supports Hibernate/Standby Modes Supports Battery Low Sleep	Supports Resume from Alarm Supports Resume from Modem Ring
Power	Full Range AC Adapter - AC-In 100~240V, 47~63Hz, DC Output 20V, 9A Easy Changeable 12-Cell Smart Lithium-Ion 6600mAH Main Battery	
Environmental Spec	**Temperature** Operating: 5°C ~ 35°C Non-Operating: -20°C ~ 60°C	**Relative Humidity** Operating: 20% ~ 80% Non-Operating: 10% ~ 90%
Physical Dimensions & Weight	397mm (w) * 298mm (d) * 49.5mm (h)	5.80+3% kg with Battery
Optional	Software DVD Player CD-ROM Drive Module DVD-ROM Drive Module DVD/CD-RW Combo Drive Module DVD-Dual Drive Module	Mini-PCI TV Tuner Module Mini-PCI 802.11 b/g Wireless LAN Module Mini-PCI 802.11b/g Wireless LAN + Bluetooth Combo Module 300K Pixel USB 2.0 Video Camera Module

External Locator - Top View with LCD Panel Open

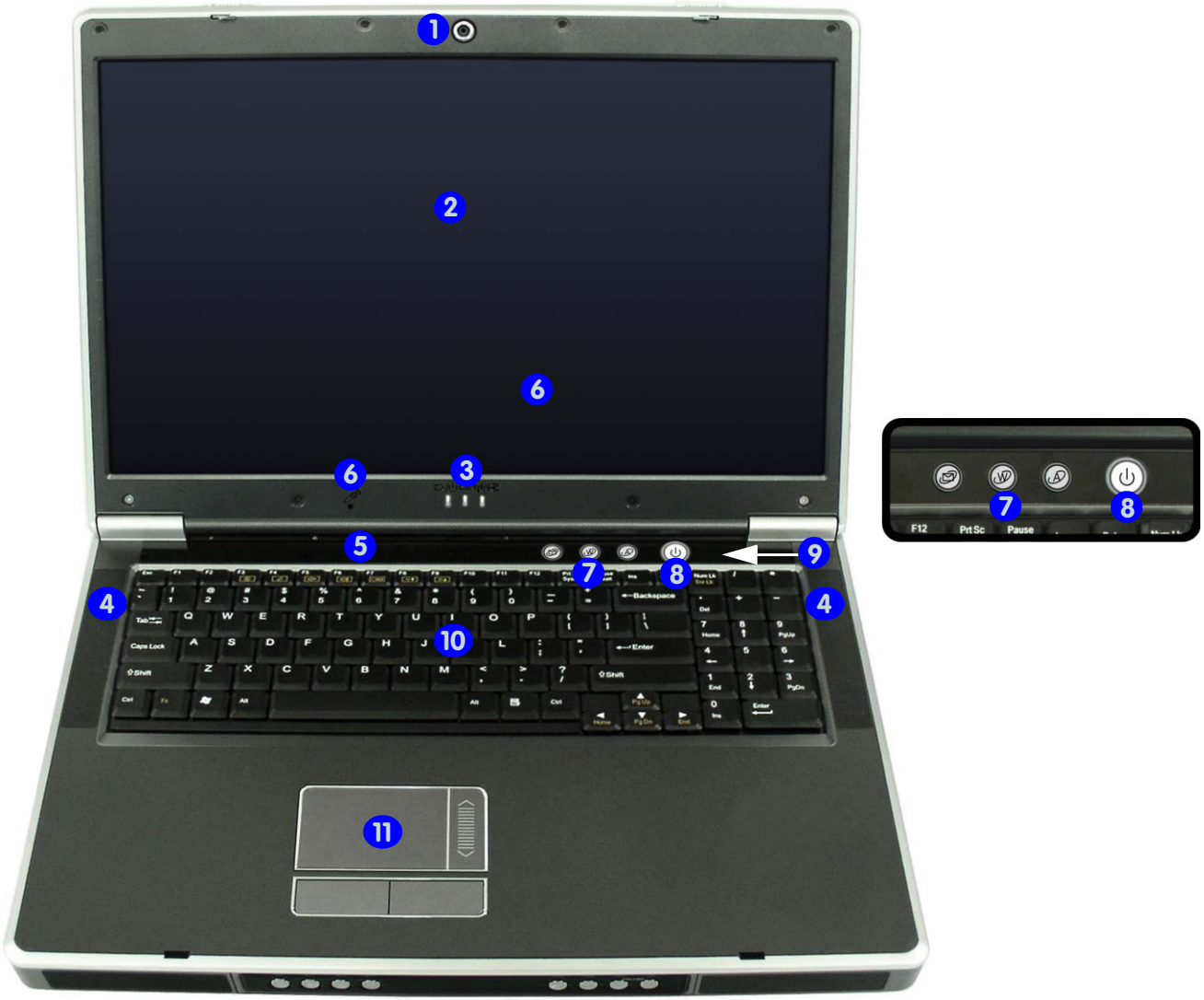

Figure 1 - 1
Top View with LCD Panel Open

1. Optional Built-In PC Camera
2. LCD
3. LED Power & Communication Indicators
4. Speakers
5. LED Status Indicators
6. Built-In Microphone
7. Hot-Key Buttons
8. Power Button
9. Lid Sensor Location (not visible externally)
10. Keyboard
11. TouchPad and Buttons

External Locator - Front & Rear Views

Figure 1 - 2
Front & Rear Views

1. LCD Latches
2. Audio DJ Player Controls
3. Consumer Infrared Transceiver*
4. Speakers
5. Vent/Fan Intake
6. DC-In Jack
7. Serial Port
8. Parallel Port
9. DVI-Out Port
10. PS2 Port
11. RJ-11 Phone Jack
12. RJ-45 LAN Jack
13. CATV Jack*
14. S-Video-In Jack*

*Enabled with **Optional** Mini-PCI TV Tuner Only

External Locator - Right & Left Side Views

Figure 1 - 3
Right & Left Side Views

1. S-Video-Out Jack
2. 4 * USB 2.0 Ports
3. 2 * Mini-IEEE 1394a Port
4. Line-In Jack
5. S/PDIF-Out Jack
6. Microphone-In Jack
7. Headphone-Out Jack
8. 7-in-1 Card Reader
9. PC Card Slot
10. Infrared Transceiver
11. Primary Optical Device Drive Bay (for CD/DVD Device)
12. Secondary Optical Device Drive Bay (for CD/DVD Device)
13. Security Lock Slot

External Locator - Bottom View

Figure 1 - 4
Bottom View

1. Battery
2. Vent/Fan Intake
3. Memory (RAM) Cover
4. Hard Disk Cover
5. Sub Woofer
6. CPU Cover
7. Video Card Cover

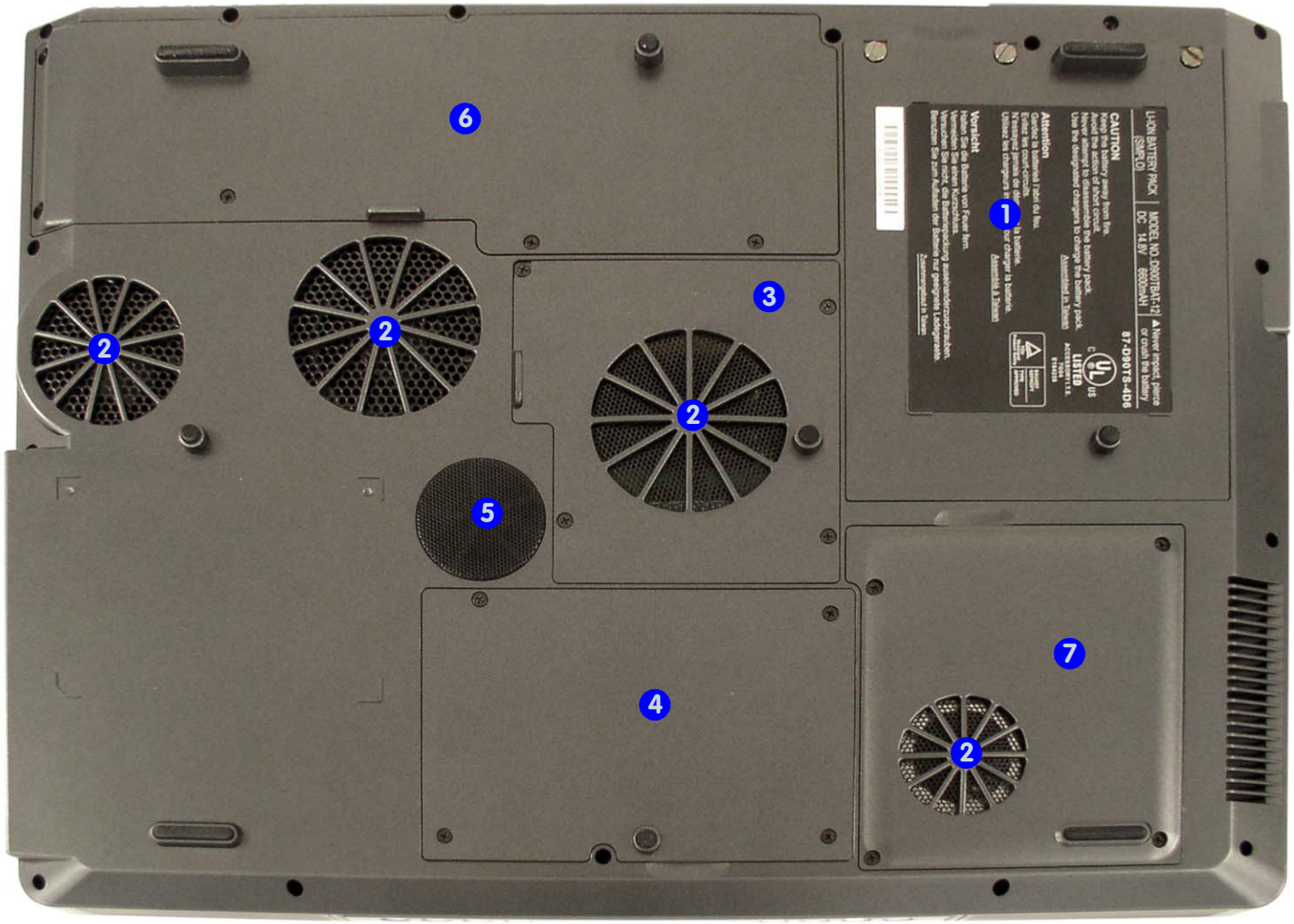

Mainboard Overview - Top (Key Parts)

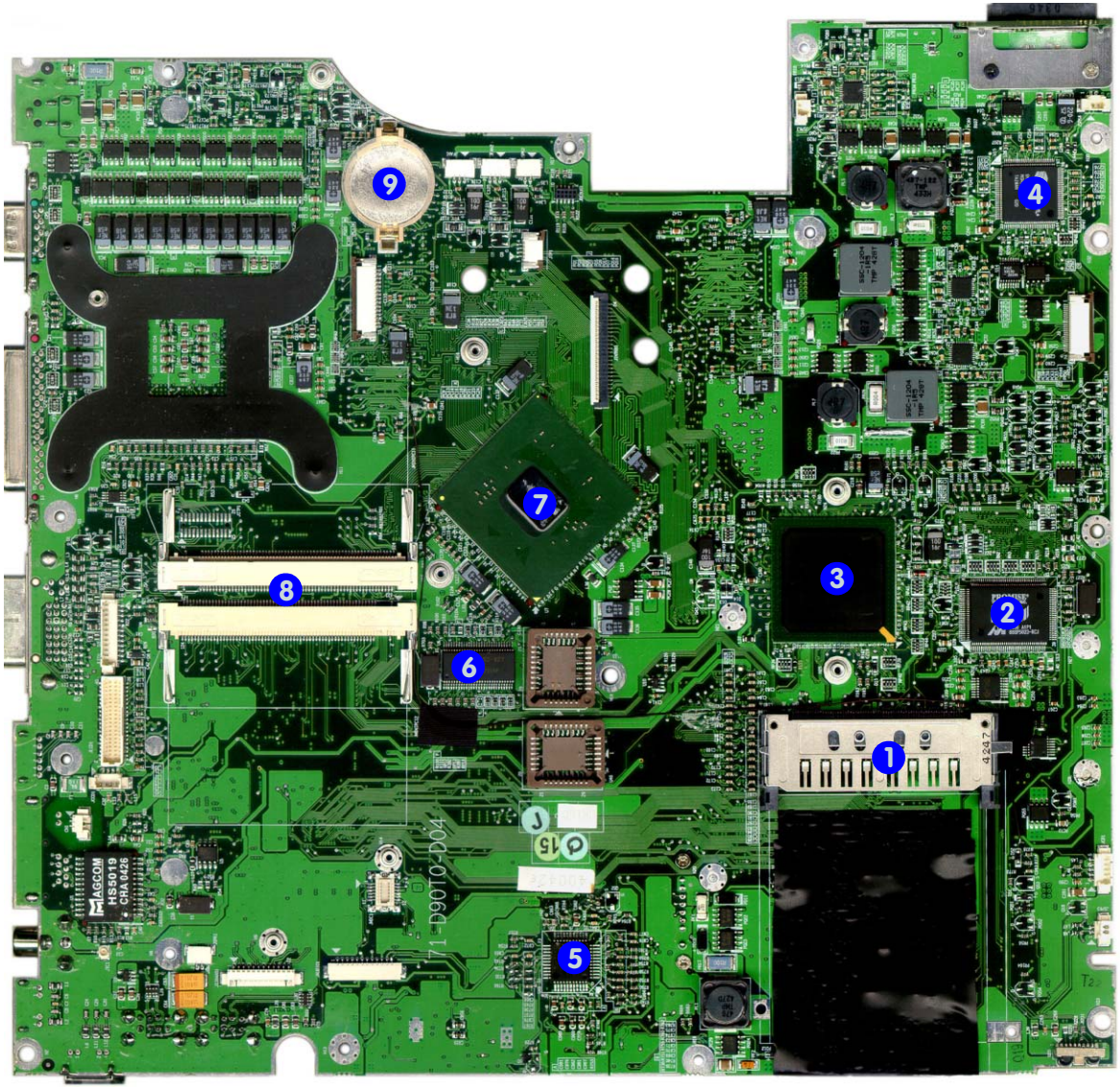

Figure 1 - 5
Mainboard Top Key Parts

1. PC Card Assembly
2. SATA RAID Controller PDC20378
3. ICH6 I/O Controller Hub
4. Audio DJ BBVL Controller
5. SRS WOW Controller
6. Clock Generator
7. Grantsdale GMCH
8. Mini-PCI Slots
9. CMOS Battery

Mainboard Overview - Bottom (Key Parts)

Figure 1 - 6
Mainboard Bottom Key Parts

1. LGA775 CPU Socket (no CPU installed)
2. Memory Slots (no memory installed)
3. Card Bus PCI-1410
4. LPC H8
5. Audio Codec
6. NS87393 LPC SIO
7. 1394a TSB43AB22
8. GigaLAN RTL8110SBL

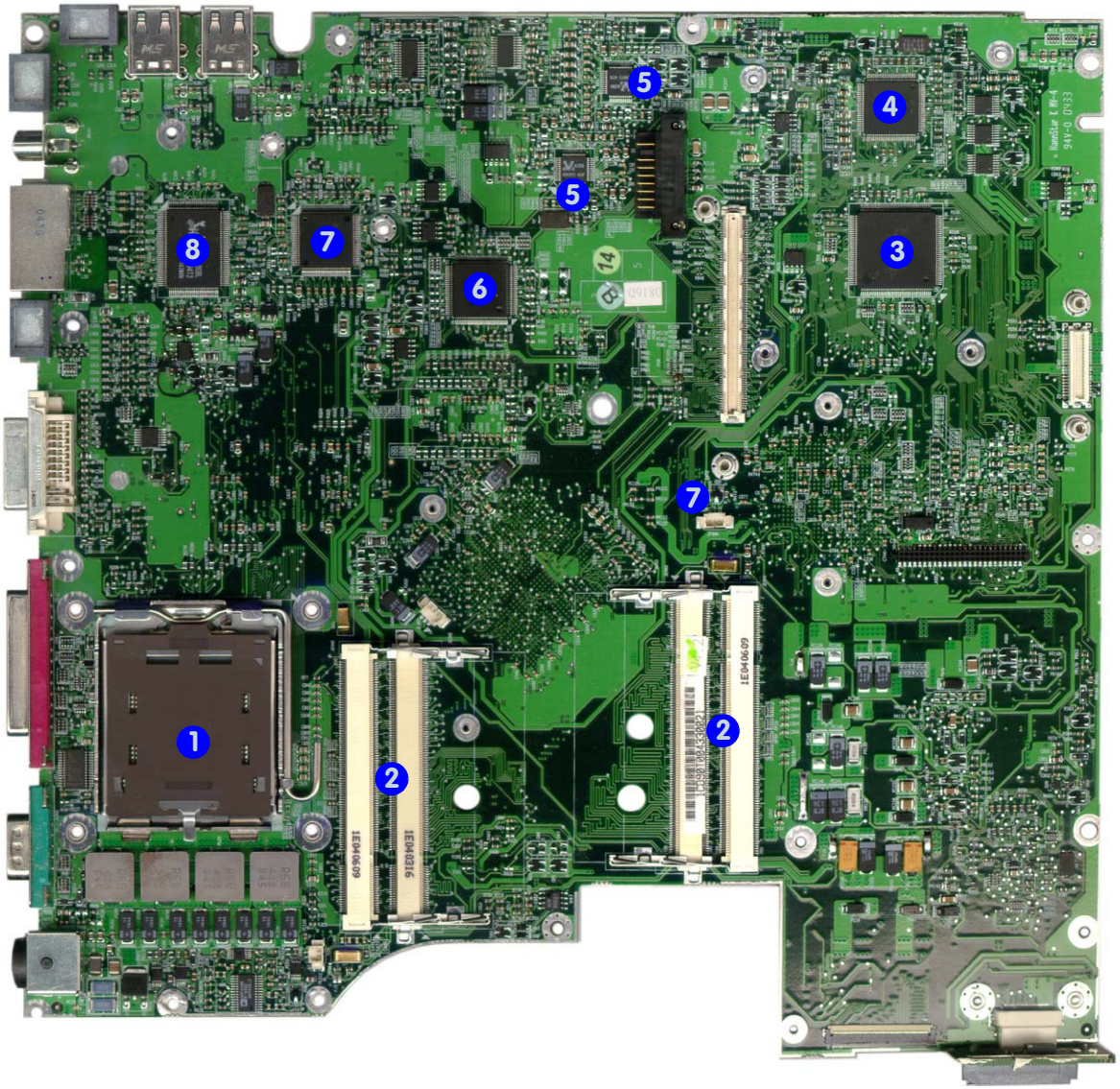

Mainboard Overview - Top (Connectors)

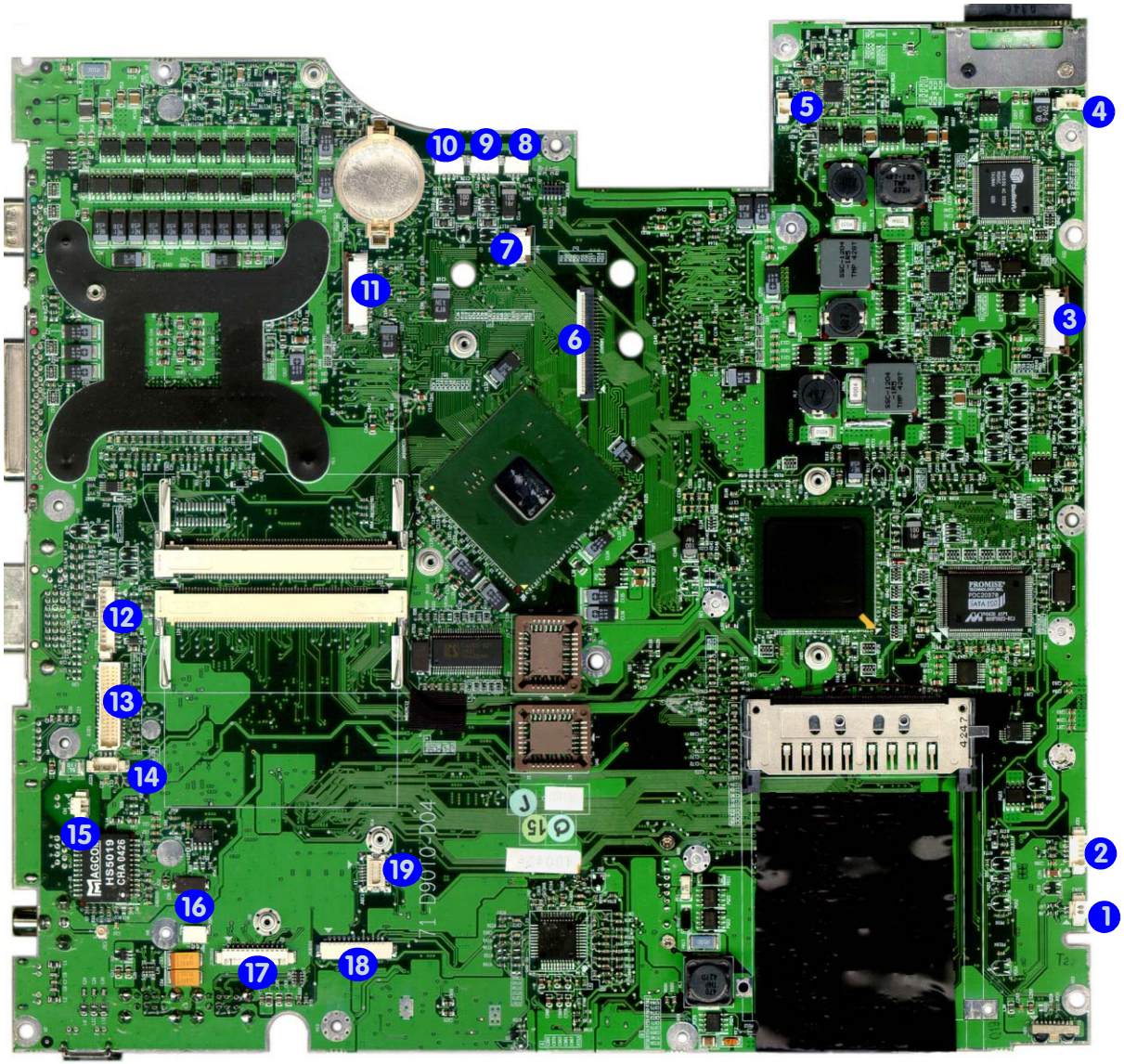

Figure 1 - 7
Mainboard Top Connectors

1. Speaker (JSPK5)
2. Card Reader(JCR1)
3. Audio DJ (J3)
4. Speaker (JSPK4)
5. Speaker (JSPK3)
6. Keyboard (JINTKB1)
7. Touchpad (JTP1)
8. Speaker (JSPK2)
9. Fan (JFAN2)
10. Fan (JFAN1)
11. Swiitchboard & Hot Keys(JSW1)
12. LED (JLED1)
13. LCD & Inverter (JLCD1)
14. PC Camera (JCCD1)
15. Modem Cable (CN1)
16. Speaker (JSPK1)
17. IEEE1394 (J1394AB1)
18. Audio Board (JAUDIO1)
19. Modem (JMDC1)

Mainboard Overview - Bottom (Connectors)

Figure 1 - 8
Mainboard Bottom Connectors

1. Optical Devices (JCD1)
2. Hard Disk (JHDD2)
3. PCI Express VGA (CON2)
4. PCI Express VGA (CON1)
5. PCI Express VGA Heat Sink Fan (JFAN4)
6. Memory Fan (JFAN3)
7. CPU Heat Sink (JRT)

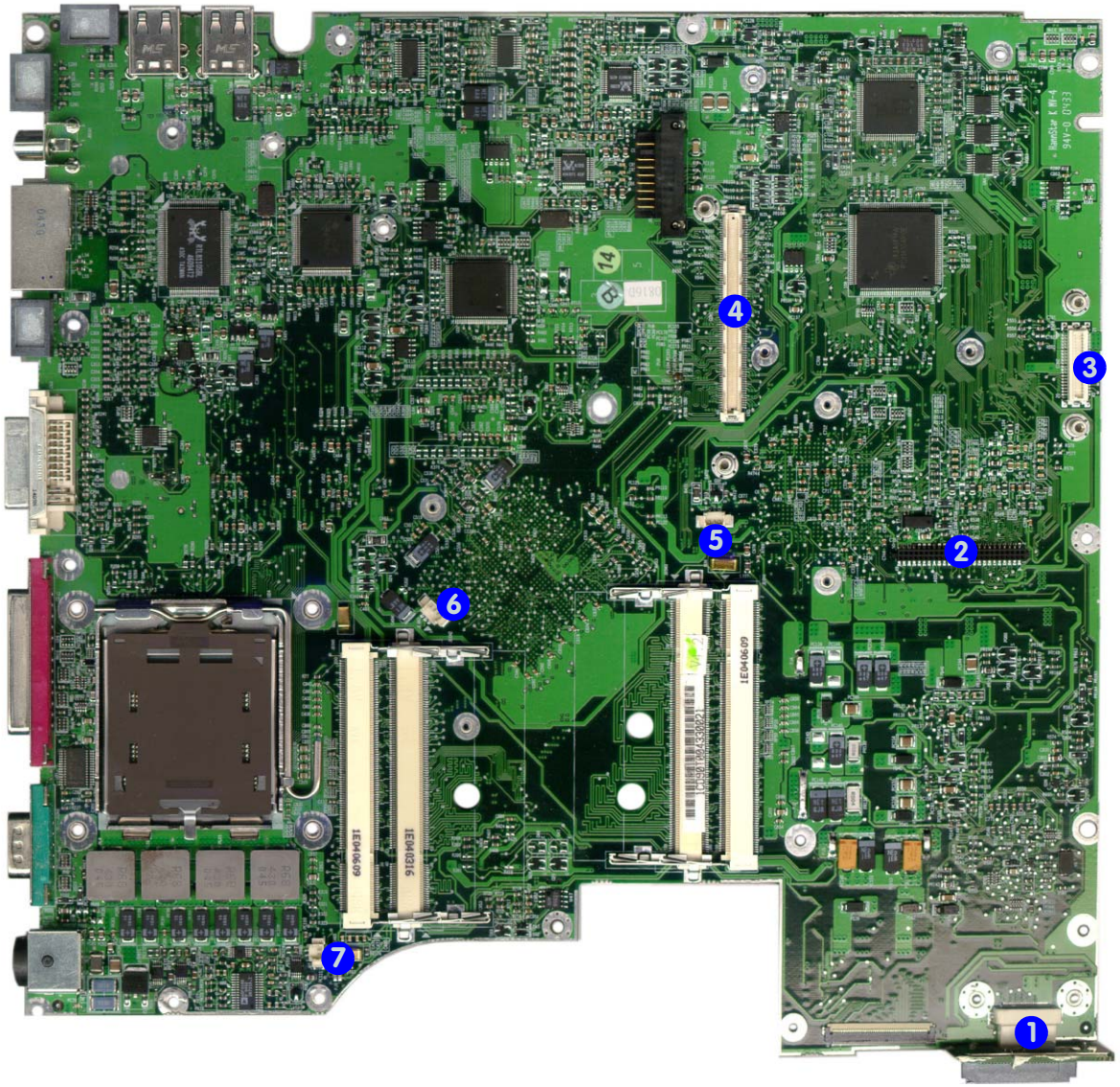

2: Disassembly

Overview

This chapter provides step-by-step instructions for disassembling the ***D900T*** series notebook's parts and subsystems. When it comes to reassembly, reverse the procedures (unless otherwise indicated).

We suggest you completely review any procedure before you take the computer apart.

Procedures such as upgrading/replacing the RAM, CD device and hard disk are included in the User's Manual but are repeated here for your convenience.

To make the disassembly process easier each section may have a box in the page margin. Information contained under the figure # will give a synopsis of the sequence of procedures involved in the disassembly procedure. A box with a lists the relevant parts you will have after the disassembly process is complete. **Note**: The parts listed will be for the disassembly procedure listed ONLY, and not any previous disassembly step(s) required. Refer to the part list for the previous disassembly procedure. The amount of screws you should be left with will be listed here also.

A box with a will provide any possible helpful information. A box with a contains warnings.

An example of these types of boxes are shown in the sidebar.

Information

Warning

NOTE: All disassembly procedures assume that the system is turned **OFF**, and disconnected from any power supply (the battery is removed too).

Maintenance Tools

The following tools are recommended when working on the notebook PC:

- M3 Philips-head screwdriver
- M2.5 Philips-head screwdriver (magnetized)
- M2 Philips-head screwdriver
- Small flat-head screwdriver
- Pair of needle-nose pliers
- Vacuum Handling Tool (for CPU removal)
- Anti-static wrist-strap

Connections

Connections within the computer are one of four types:

Locking collar sockets for ribbon connectors	To release these connectors, use a small flat-head screwdriver to gently pry the locking collar away from its base. When replacing the connection, make sure the connector is oriented in the same way. The pin1 side is usually not indicated.
Pressure sockets for multi-wire connectors	To release this connector type, grasp it at its head and gently rock it from side to side as you pull it out. Do not pull on the wires themselves. When replacing the connection, do not try to force it. The socket only fits one way.
Pressure sockets for ribbon connectors	To release these connectors, use a small pair of needle-nose pliers to gently lift the connector away from its socket. When replacing the connection, make sure the connector is oriented in the same way. The pin1 side is usually not indicated.
Board-to-board or multi-pin sockets	To separate the boards, gently rock them from side to side as you pull them apart. If the connection is very tight, use a small flat-head screwdriver - use just enough force to start.

Maintenance Precautions

The following precautions are a reminder. To avoid personal injury or damage to the computer while performing a removal and/or replacement job, take the following precautions:

1. **Don't drop it**. Perform your repairs and/or upgrades on a stable surface. If the computer falls, the case and other components could be damaged.
2. **Don't overheat it**. Note the proximity of any heating elements. Keep the computer out of direct sunlight.
3. **Avoid interference**. Note the proximity of any high capacity transformers, electric motors, and other strong magnetic fields. These can hinder proper performance and damage components and/or data. You should also monitor the position of magnetized tools (i.e. screwdrivers).
4. **Keep it dry**. This is an electrical appliance. If water or any other liquid gets into it, the computer could be badly damaged.
5. **Be careful with power**. Avoid accidental shocks, discharges or explosions.

- Before removing or servicing any part from the computer, turn the computer off and detach any power supplies.
- When you want to unplug the power cord or any cable/wire, be sure to disconnect it by the plug head. Do not pull on the wire.

6. **Peripherals** – Turn off and detach any peripherals.
7. **Beware of static discharge**. ICs, such as the CPU and main support chips, are vulnerable to static electricity. Before handling any part in the computer, discharge any static electricity inside the computer. When handling a printed circuit board, do not use gloves or other materials which allow static electricity buildup. We suggest that you use an anti-static wrist strap instead.
8. **Beware of corrosion**. As you perform your job, avoid touching any connector leads. Even the cleanest hands produce oils which can attract corrosive elements.
9. **Keep your work environment clean**. Tobacco smoke, dust or other air-born particulate matter is often attracted to charged surfaces, reducing performance.
10. **Keep track of the components**. When removing or replacing any part, be careful not to leave small parts, such as screws, loose inside the computer.

Power Safety Warning

Before you undertake any upgrade procedures, make sure that you have turned off the power, and disconnected all peripherals and cables (including telephone lines). It is advisable to also remove your battery in order to prevent accidentally turning the machine on.

Cleaning

Do not apply cleaner directly to the computer, use a soft clean cloth.
Do not use volatile (petroleum distillates) or abrasive cleaners on any part of the computer.

Disassembly Steps

The following table lists the disassembly steps, and on which page to find the related information. **PLEASE PERFORM THE DISASSEMBLY STEPS IN THE ORDER INDICATED.**

To remove the Battery:

1. Remove the battery *page 2 - 5*

To remove the HDD:

1. Remove the battery *page 2 - 5*
2. Remove the HDD *page 2 - 6*

To remove the System Memory:

1. Remove the battery *page 2 - 5*
2. Remove the system memory *page 2 - 8*

To remove the Optical Device:

1. Remove the battery *page 2 - 5*
2. Remove the Optical Device *page 2 - 10*

To remove the Processor:

1. Remove the battery *page 2 - 5*
2. Remove the processor *page 2 - 11*

To remove the PCI Express Video Card:

1. Remove the battery *page 2 - 5*
2. Remove the PCI Express Video Card *page 2 - 13*

To remove the Keyboard & Shielding Plate:

1. Remove the battery *page 2 - 5*
2. Remove the keyboard & shielding plate *page 2 - 13*

To remove the Modem Module:

1. Remove the battery *page 2 - 5*
2. Remove the modem module *page 2 - 15*

To remove the WLAN/WLAN Btooth Module:

1. Remove the battery *page 2 - 5*
2. Remove the WLAN/Btooth module *page 2 - 16*

To remove the TV Tuner

1. Remove the battery *page 2 - 5*
2. Remove the TV Tuner *page 2 - 17*

To remove the Camera Module:

1. Remove the battery *page 2 - 5*
2. Remove the camera module *page 2 - 18*

Removing the Battery

1. Turn the computer **off**, and turn it over.
2. Remove screws 1 - 3 from the battery.
3. Lift the battery 4 out of the computer.

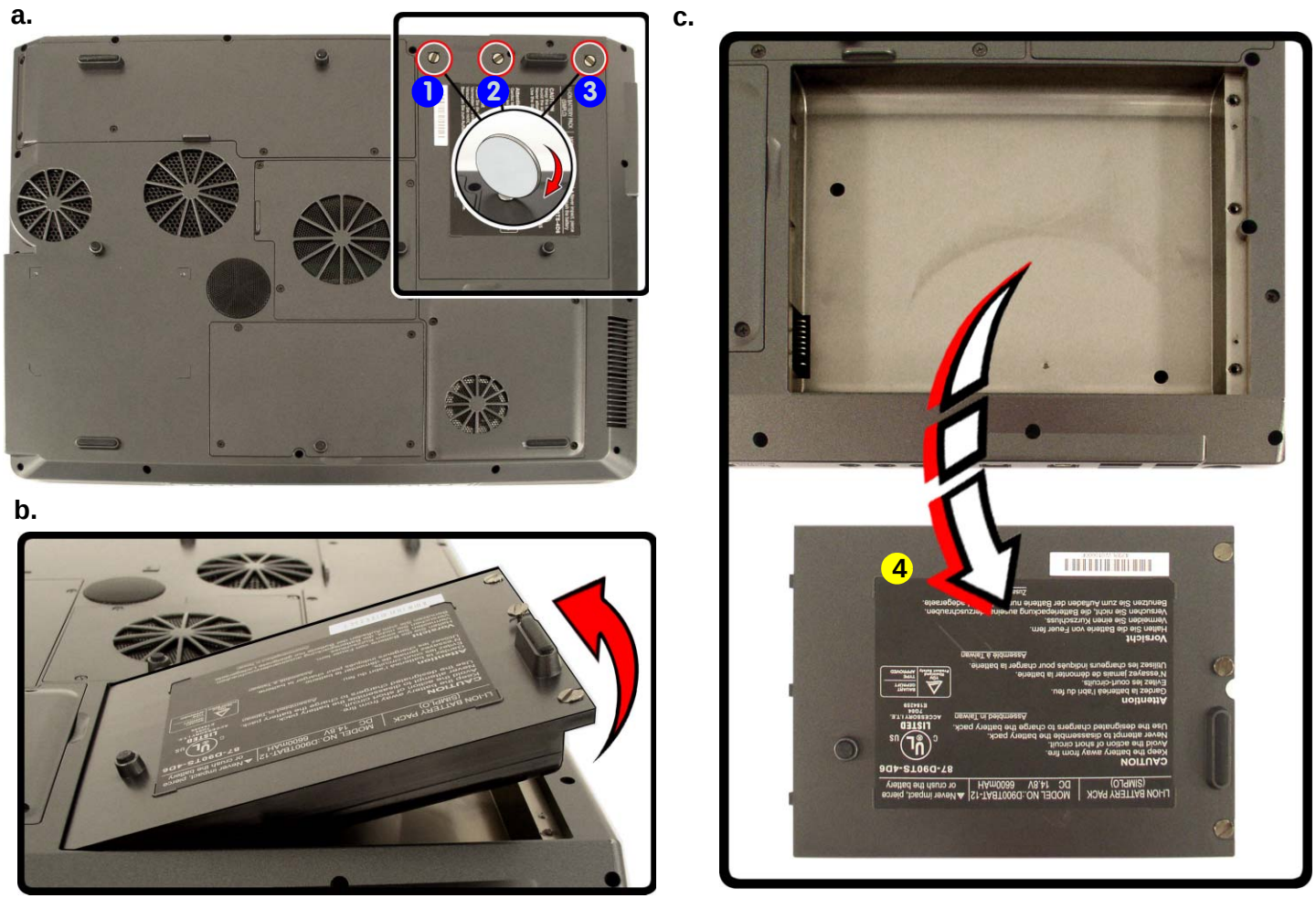

Figure 2 - 1
Battery Removal

a. Remove the 3 screws.
b. Lift the battery up.
c. Remove the battery.

4. Battery

- 3 Screws

Removing the Hard Disk Drive

The hard disk drive is mounted in a removable case and can be taken out to accommodate other 2.5" IDE hard disk drives with a height of 9.5mm (h). Follow your operating system's installation instructions, and install all necessary drivers and utilities (as outlined in **Chapter 5 of the User's Manual**) when setting up a new hard disk.

1. Turn **off** the computer, remove the battery (*page 2 - 5*) and turn it over.
2. Remove screws 1 - 4 from the hard disk bay cover.
3. Remove the hard disk bay cover 5.
4. Remove screws 6 - 9 from the hard disk bracket

HDD System Warning

New HDD's are blank. Before you begin make sure:

You have backed up any data you want to keep from your old HDD.

You have all the CD-ROMs and FDDs required to install your operating system and programs.

If you have access to the internet, download the latest application and hardware driver updates for the operating system you plan to install. Copy these to a removable medium.

Jumper Settings for Two Hard Disks

When using **two hard disks** in your computer, make sure to set the jumper on **the slave** hard disk to the **cable select option** in order for the system to recognize the disks (see your hard disk manual or the information printed on the hard disk itself for details on the jumper settings). The **slave** disk will automatically be in the **upper slot** of the hard disk case, the **master** will be in the **lower slot** (as defined by the hard disk cable).

Configure the RAID according to the instructions in Chapter 8 of the User's Manual.

a.

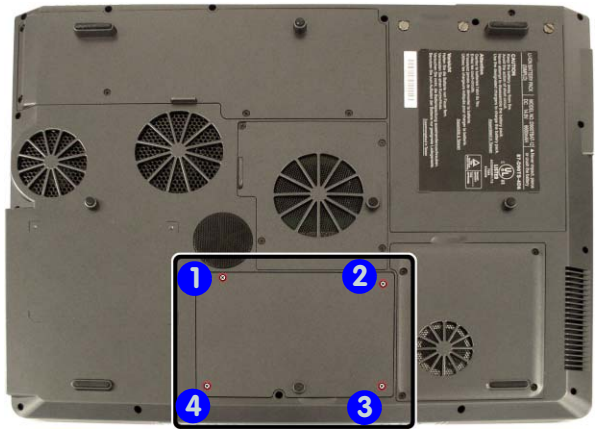

b.

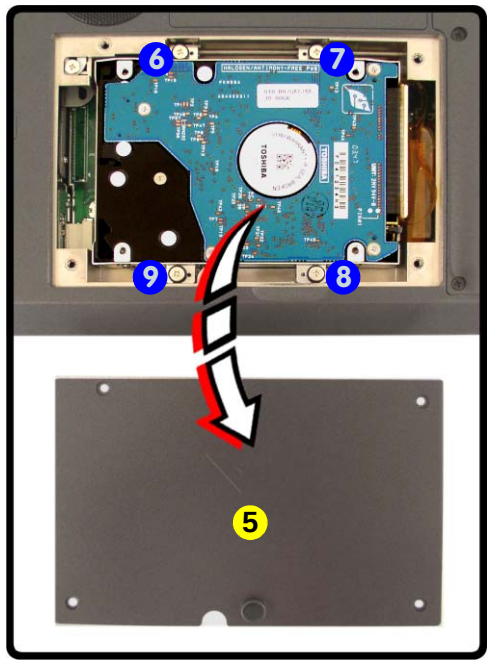

Figure 2 - 2
HDD Bay Cover Removal

a. Remove the 4 screws.
b. Remove the hard disk bay cover, and the bracket screws.

5. HDD Bay Cover

- 8 Screws

5. Release the cable 10 and lift the hard disk assembly up out off the computer.
6. Remove screws 11 - 18 in order to separate the bracket 19 from the hard disk(s) 20 & 21 , and disconnect the cable 10 .
7. Reverse the process to install a new hard disk(s).

c.

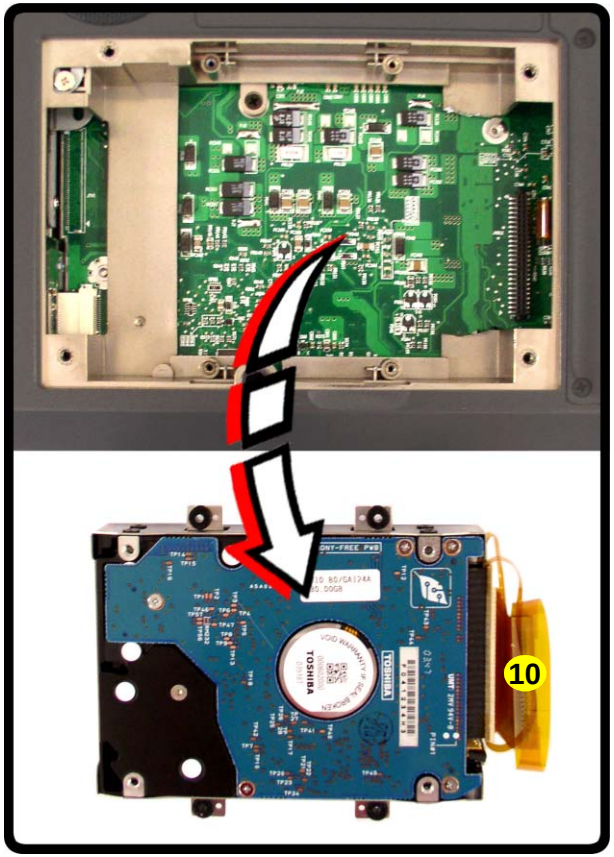

d.

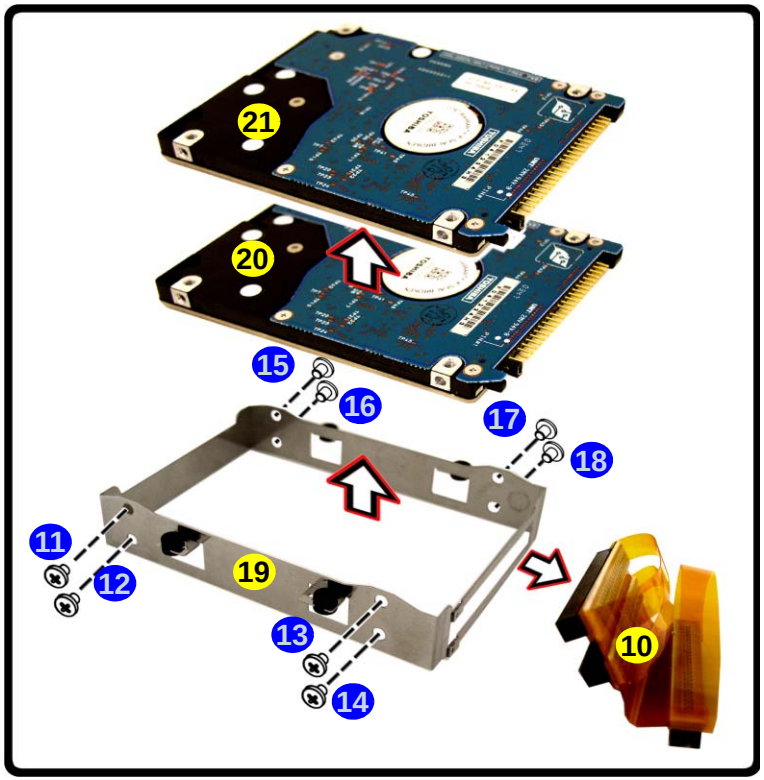

Figure 2 - 3
HDD Removal

c. Release the cable and lift the assembly out of the computer.
d. Remove the screws and cable, then separate the HDD(s) from the bracket.

10. HDD Cable
19. HDD Bracket
20. Master HDD
21. Slave HDD

- 8 Screws

Removing the System Memory (RAM)

The computer has **four** memory sockets for 200 pin Small Outline Dual In-line (SO-DIMM) - **DDR-II (DDR2)** - type memory modules. The total memory size is automatically detected by the POST routine once you turn on your computer.

1. Turn **off** the computer, remove the battery (*page 2 - 5*) and turn it over.
2. Locate the memory (RAM) bay cover and remove screws 1 - 4, and carefully (the fan cable will still be attached) lift off the bay cover.
3. Disconnect the cable at point 5.

Figure 2 - 4
Memory Socket Cover Removal

a. Remove the screws.
b. Carefully lift the cover off the computer, and disconnect the fan cable.

a.

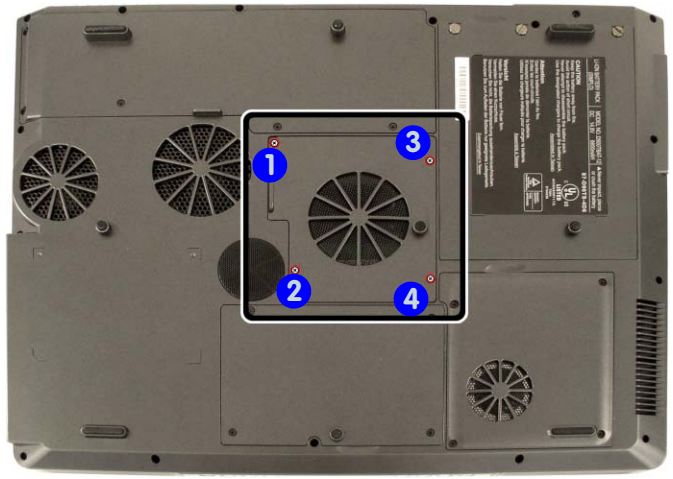

b.

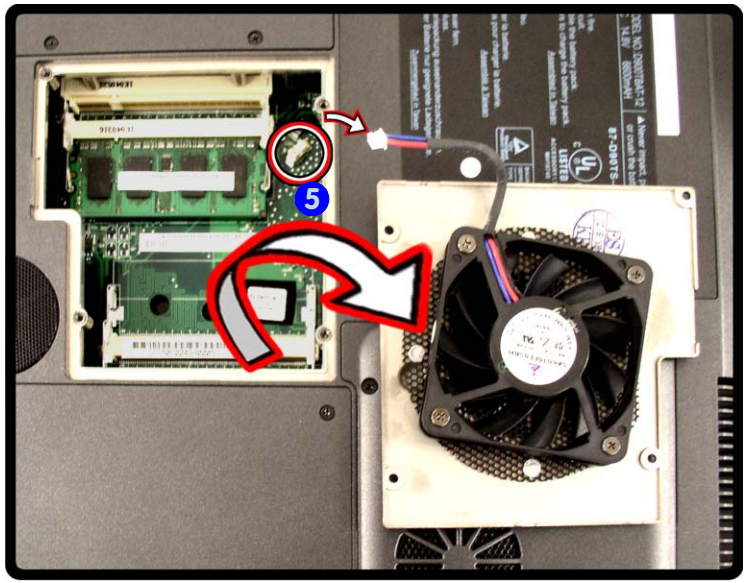

- 4 Screws

4. Gently pull the two release latches (6 & 7) on the sides of the memory socket in the direction indicated by the arrows in ***Figure 2 - 5***.
5. The RAM module 8 will pop-up, and you can remove it.
6. Pull the latches to release the other modules if necessary.
7. Insert a new module holding it at about a 30° angle and fit the connectors firmly into the memory slot.
8. The module's pin alignment will allow it to only fit one way. Make sure the module is seated as far into the slot as it will go. DO NOT FORCE the module; it should fit without much pressure.
9. Press the module in and down towards the mainboard until the slot levers click into place to secure the module.
10. Replace the memory socket cover and the **4** screws (see ***Figure 2 - 4***).
11. Restart the computer to allow the BIOS will register the new memory configuration as it starts up.

a.

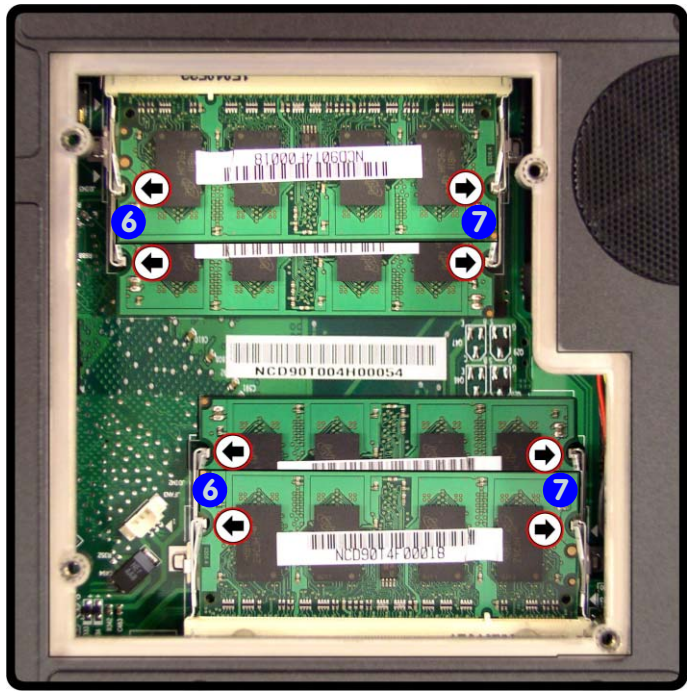

b.

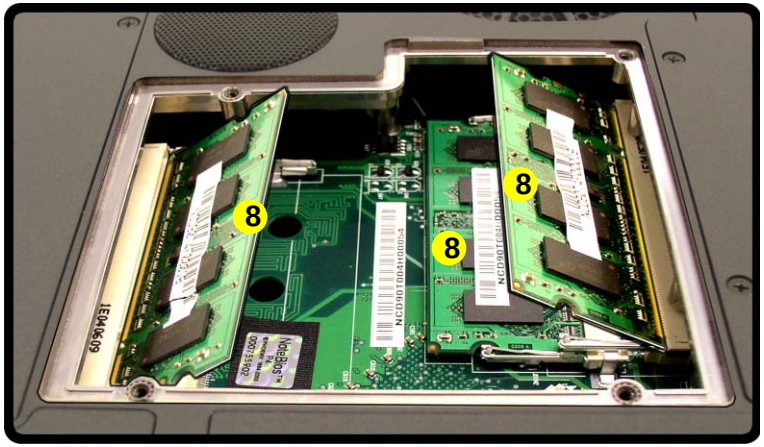

Figure 2 - 5
Removing/ Installing a RAM Module

a. Pull the release latches.
b. Remove the module(s).

Contact Warning

Be careful not to touch the metal pins on the module's connecting edge. Even the cleanest hands have oils which can attract particles, and degrade the module's performance.

8. RAM Module(s)

Removing the Optical Device

1. Turn **off** the computer, remove the battery (*page 2 - 5*) and turn it over.
2. Locate the hard disk bay cover and remove screws 1 - 4, and remove the bay cover 5.
3. Remove screw 6 and use the screwdriver to push the optical device(s) 8 out of the computer at point 7.

Figure 2 - 6
Optical Device Removal

a. Remove the 4 screws.
b. Remove the cover.
c. Remove the screw.
d. Push the optical device(s) out.

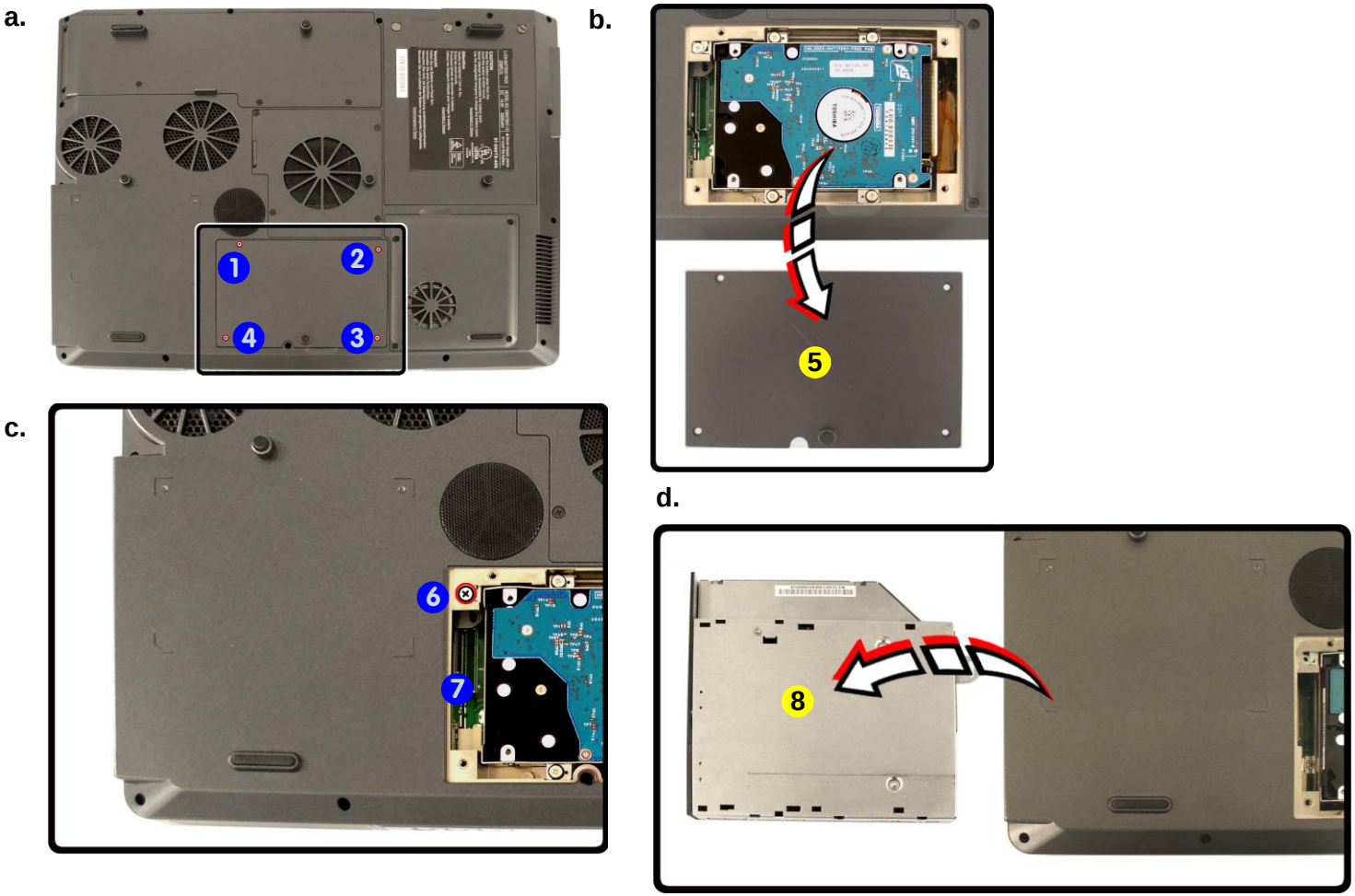

5. Socket Cover
8. Optical Device

- 4 Screws

Removing the Processor

1. Turn **off** the computer, remove the battery (*page 2 - 5*) and turn it over.
2. Remove screws 1 - 5 from the CPU bay cover.
3. Carefully lift up the CPU bay cover 6.
4. Remove screws 7 - 10 from the heat sink, **in the order indicated on the label (and the same screw order when replacing the heat sink)**, and disconnect cable 11 from the mainboard (the cable remains attached to the heat sink).
5. Carefully lift up the heat sink 12 off the computer.

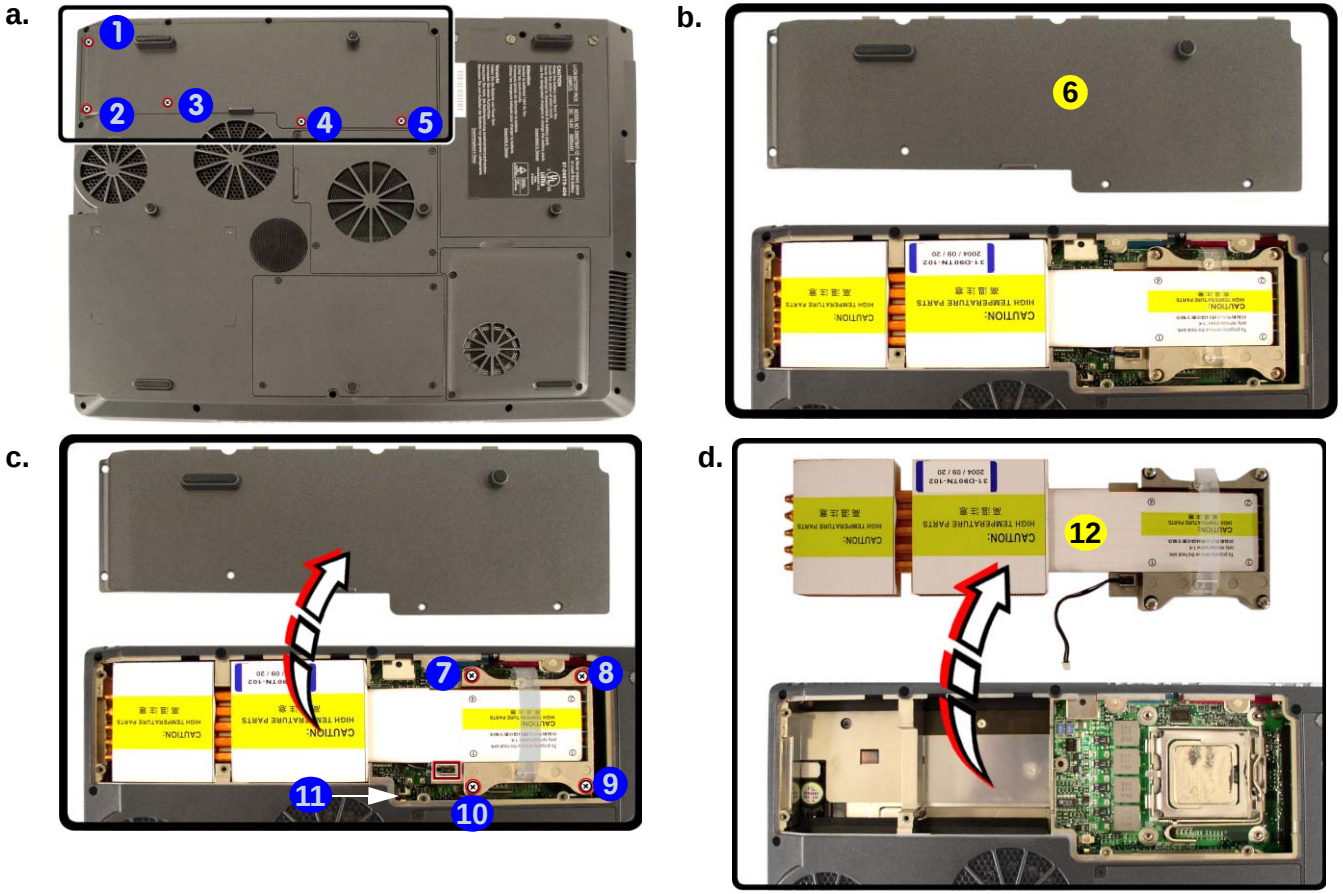

Figure 2 - 7
Processor Removal

a. Remove the screws.
b. Remove the bay cover computer.
c. Remove the screws in the order indicated, and disconnect the cable.
d. Remove the heat sink.

Reassembly Screw Order

When replacing the heat sink, make sure you insert the screws in the same order indicated on the label.

6. CPU Bay Cover
12. Heat Sink Unit

- 9 Screws

6. Unlock the processor by sliding out and raising lever 13 in the direction indicated by the arrow.
7. Raise the CPU lock 14.
8. Lift the CPU 16 off the computer using a vacuum handling tool (as pictured 15).

Figure 2 - 8
Processor Removal (cont'd)

a. Raise the lever to unlock the CPU.
b. Raise the CPU lock.
c. Lift the CPU off the socket with a vacuum handling tool.

a.

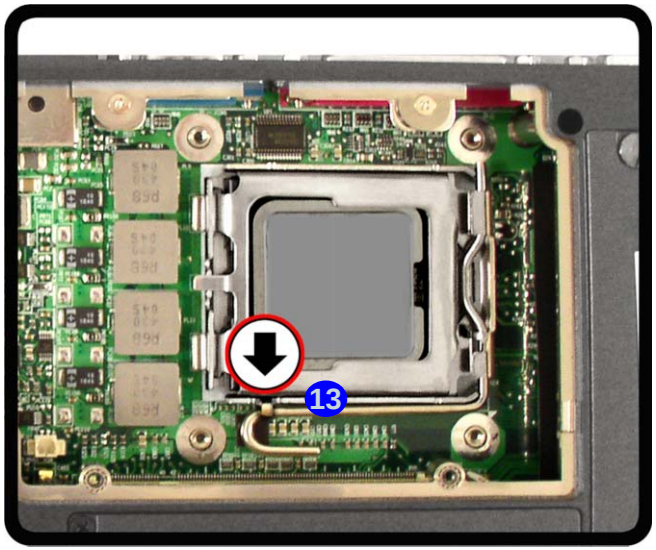

b.

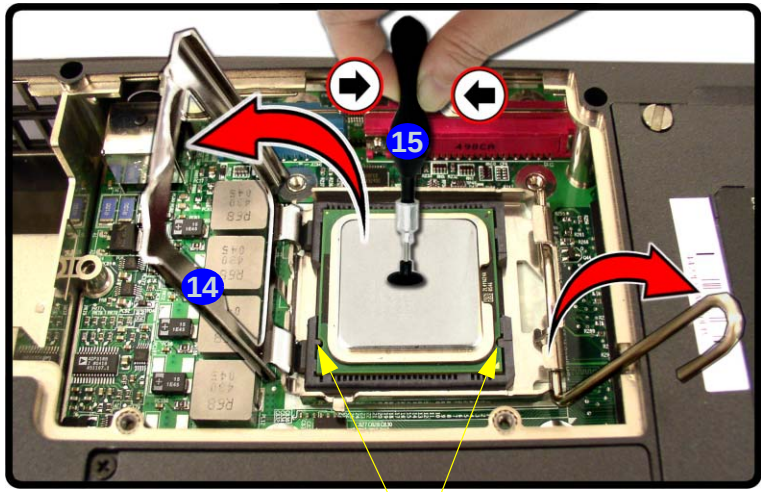

Line up the indents when replacing the CPU

c.

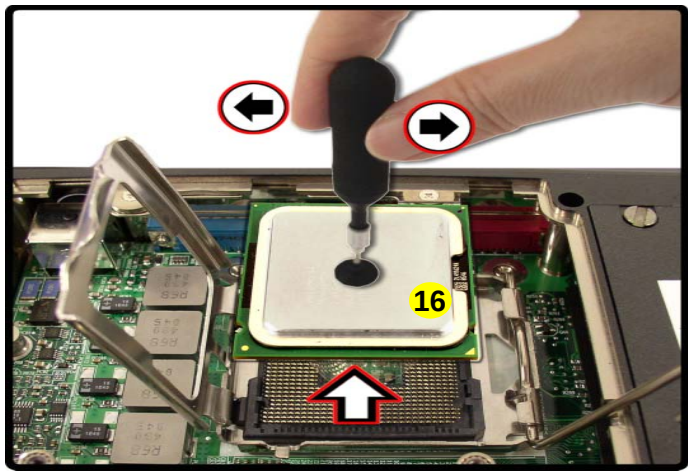

Caution

The heat sink, and CPU area in general, contains parts which are subject to high temperatures. Allow the area time to cool before removing these parts.

16. CPU

Re-Insering a CPU

When re-inserting the CPU make sure you use the vacuum handling tool to lift it up, and to place in the socket.

Place the CPU in the socket carefully and line up the indents on the side of the CPU with the appropriate postions on the socket. The CPU's pin alignment and indents will allow it to only fit one way. Make sure the CPU is seated as far into the slot as it will go. DO NOT FORCE the CPU; it should fit without much pressure.

Removing the PCI Express Video Card

1. Turn **off** the computer, remove the battery (*page 2 - 5*) and turn it over.
2. Remove screws 1 - 4, and remove the bay cover 5.
3. Remove screws 6 - 9 from the heat sink, **in the order indicated on the label (and the same screw order when replacing the heat sink),** and disconnect cable 10 from the mainboard.
4. Carefully lift the heat sink 11 off the computer.
5. Remove the PCI Express Video Card 12 as indicated.

a.

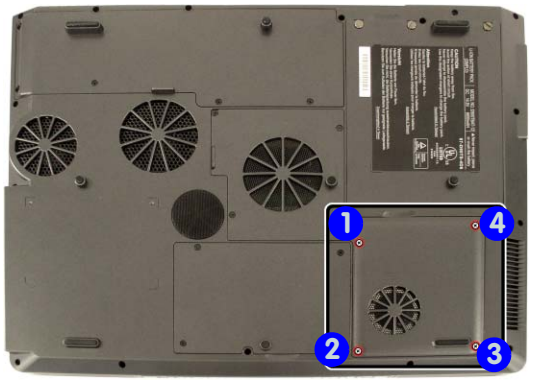

b.

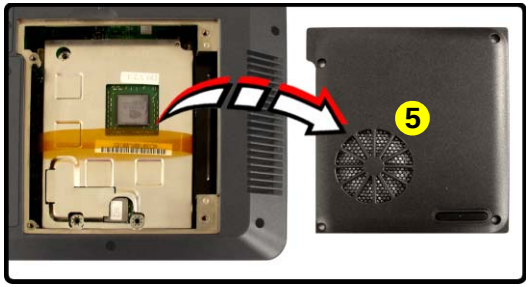

c.

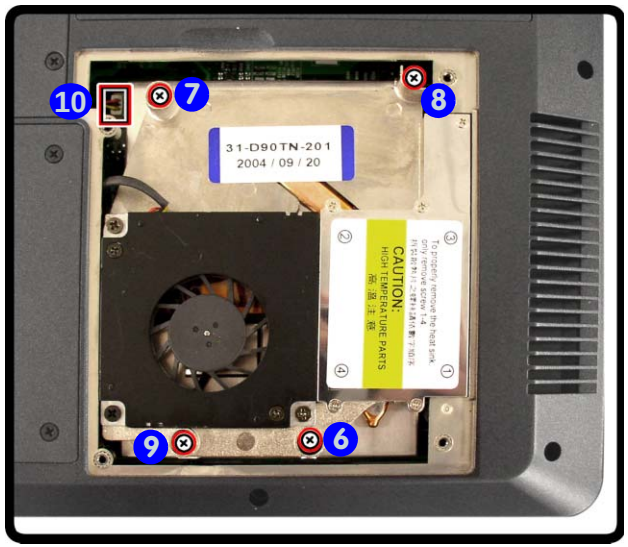

d.

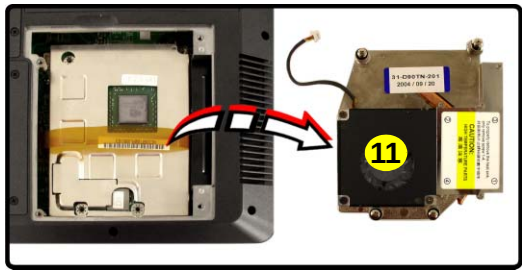

e.

Figure 2 - 9
PCI Express Video Card Removal

a. Remove the screws.
b. Remove the cover.
c. Remove the screws in the order indicated, and disconnect the cable.
d. Remove the heat sink.
e. Remove the card.

Reassembly Screw Order & Color

When replacing the heat sink, make sure you insert the screws in the same order indicated on the label.

5. PCI Express Bay Cover
11. Heat Sink Unit
12. PCI Express Video Card

- 8 Screws

Removing the Keyboard & Shielding Plate

1. Turn **off** the computer and remove the battery (*page 2 - 5*).
2. Press the **four** keyboard latches 1 - 4 at the top of the keyboard to elevate the keyboard from its normal position (you may need to use a small screwdriver to do this).
3. Carefully lift the keyboard up and disconnect the keyboard ribbon cable at point 5 (be careful not to bend the keyboard ribbon cable).
4. Set the keyboard 6 aside and remove screws 7 - 11 from the keyboard shielding plate.
5. Lift off the shielding plate 12 .

Figure 2 - 10
Keyboard & Shielding Plate Removal

a. Press in the keyboard latches and elevate the keyboard.
b. Disconnect the keyboard cable.
c. Remove the keyboard.
d. Remove the screws from shielding plate.
d. Remove the shielding plate.

a.

b.

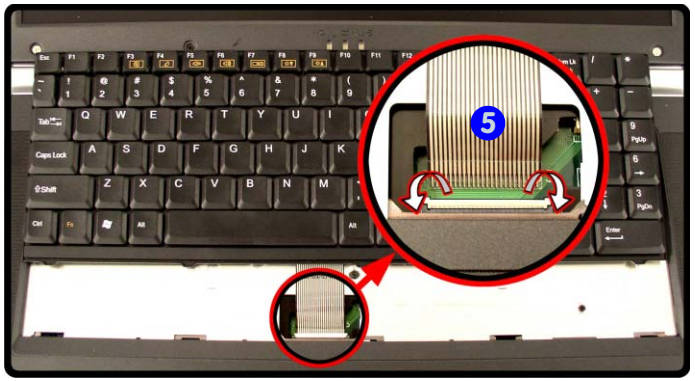

c.

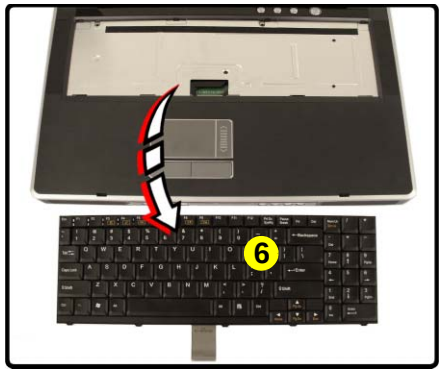

d.

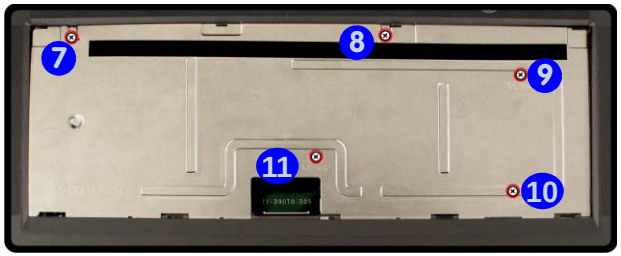

e.

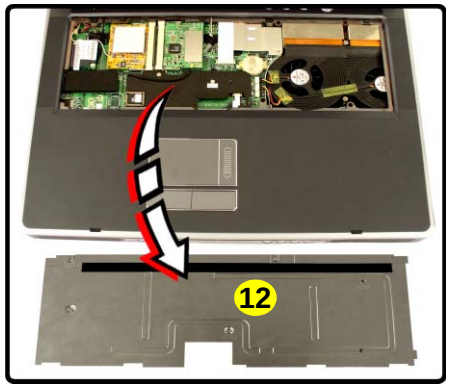

6. Keyboard
12 Shielding Plate

- 5 Screws

Removing the Modem Module

1. Turn **off** the computer, remove the battery (*page 2 - 5*) and the keyboard and shielding plate (*page 2 - 13*).
2. Remove screws 1 - 2 from the modem module.
3. Carefully lift up the modem module and disconnect cable 3.
4. Remove the modem module 4.

a.

b.

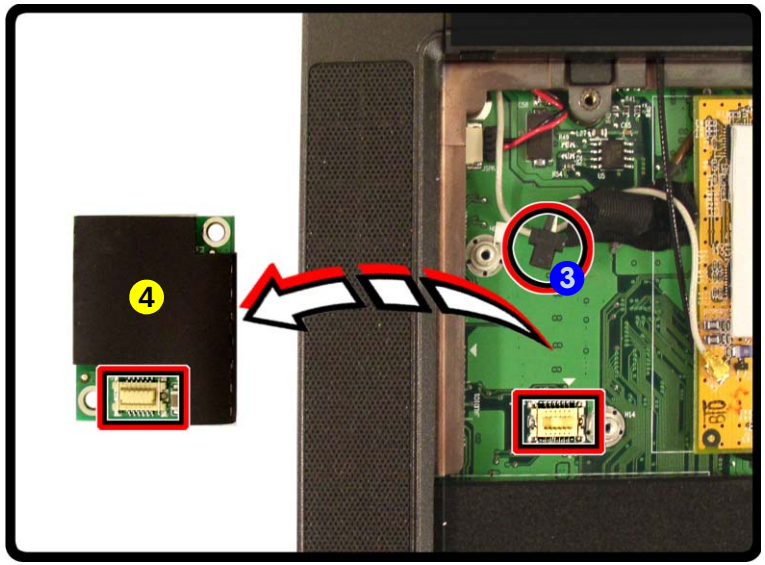

Figure 2 - 11
Modem Module Removal

a. Remove the screws.
b. Carefully lift the module up and disconnect the cable.

4. Modem Module

- 2 Screws

Removing the Wireless LAN/WLAN & Bluetooth Combo Module

1. Turn **off** the computer, remove the battery (*page 2 - 5*) and the keyboard and shielding plate (*page 2 - 13*).
2. Carefully disconnect the antenna cable at point 1.
3. Gently pull the two release latches 2 & 3 on the sides of the socket in the direction indicated by the arrows.
4. The module 4 will pop-up, and you can remove it.

Figure 2 - 12
Wireless LAN/WLAN & Bluetooth Combo Module Removal

a. Disconnect the cable and pull the release latches.
b. Remove the module.

a.

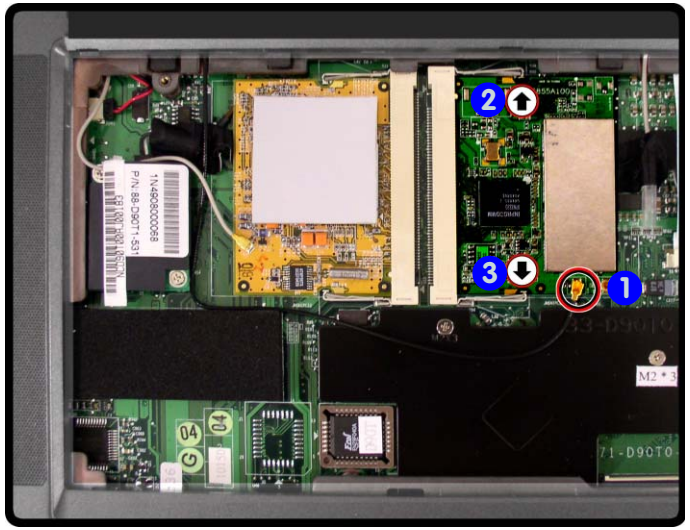

b.

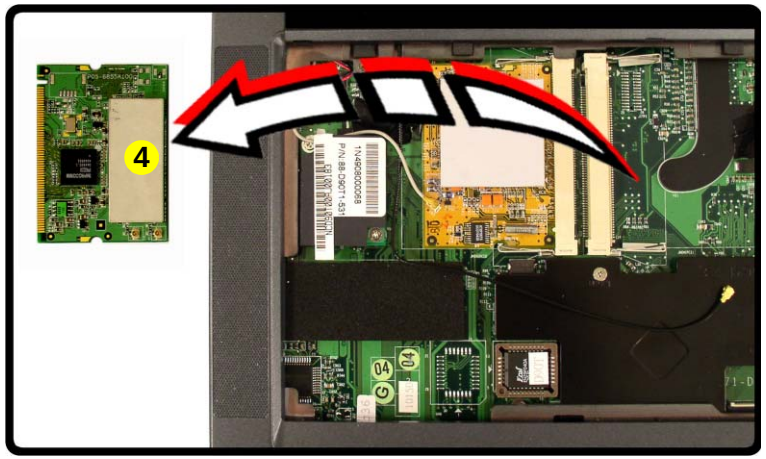

4. WLAN or WLAN & Bluetooth Combo Module

Removing the TV Tuner

1. Turn **off** the computer, remove the battery (*page 2 - 5*) and the keyboard and shielding plate (*page 2 - 13*).
2. Carefully disconnect the antenna cable at point 1.
3. Gently pull the two release latches 2 & 3 on the sides of the socket in the direction indicated by the arrows.
4. The module 4 will pop-up, and you can remove it.

a.

b.

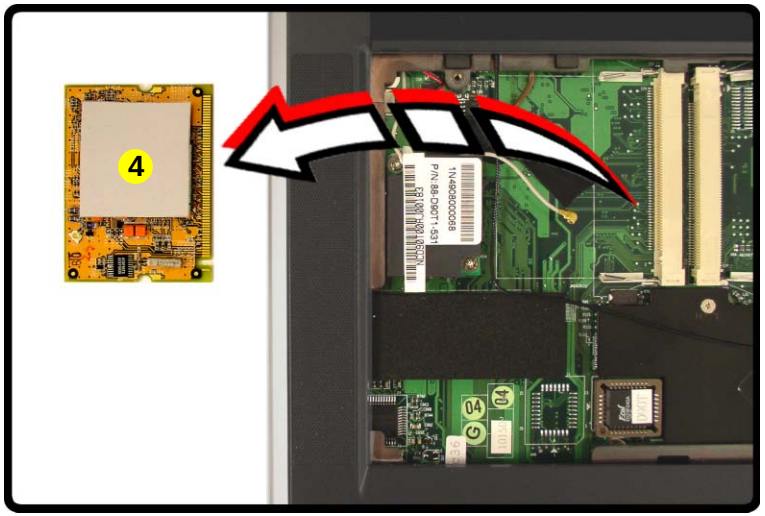

Figure 2 - 13
TV Tuner Removal

a. Disconnect the cable and pull the release latches.
b. Remove the module.

4. TV Tuner Module

Removing the Camera Module

1. Turn **off** the computer, remove the battery (*page 2 - 5*).
2. Remove screws 1 - 8 (and any rubber covers) from the front of the LCD assembly, then run your finger around the middle of the frame to carefully unsnap (and ease forward) the LCD front panel module from the LCD assembly.
3. Disconnect he cable 9 then carefully remove the camera module 10 .

Figure 2 - 14
Camera Module Removal

a. Remove the screws and ease forward the front panel module.
b. Disconnect the cable.
c. Remove the module.

a.

b.

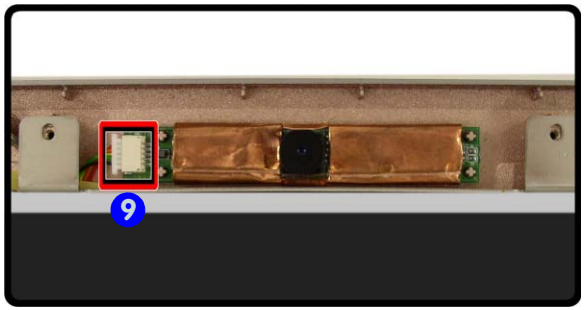

c.

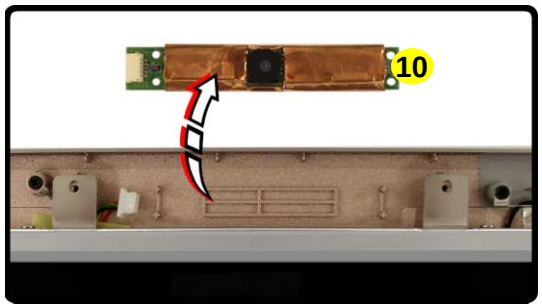

10. Camera Module

- 8 Screws

Appendix A:Part Lists

This appendix breaks down the ***D900T*** series notebook's construction into a series of illustrations. The component part numbers are indicated in the tables opposite the drawings.

Note: This section indicates the *manufacturer's* part numbers. Your organization may use a different system, so be sure to cross-check any relevant documentation.

Note: Some assemblies may have parts in common (especially screws). However, the part lists DO NOT indicate the total number of duplicated parts used.

Note: Be sure to check any update notices. The parts shown in these illustrations are appropriate for the system at the time of publication. Over the product life, some parts may be improved or re-configured, resulting in *new* part numbers.

Part List Illustration Location

The following table indicates where to find the appropriate part list illustration.

Table A - 1
Part List Illustration Location

Part	D470W
Top	*page A - 3*
Bottom	*page A - 4*
LCD	*page A - 5*
Toshiba DVD-ROM Drive	*page A - 6*
QSI Combo Drive	*page A - 7*
DVD Dual Drive	*page A - 8*
Hard Disk Drive	*page A - 9*

Top (D900T)

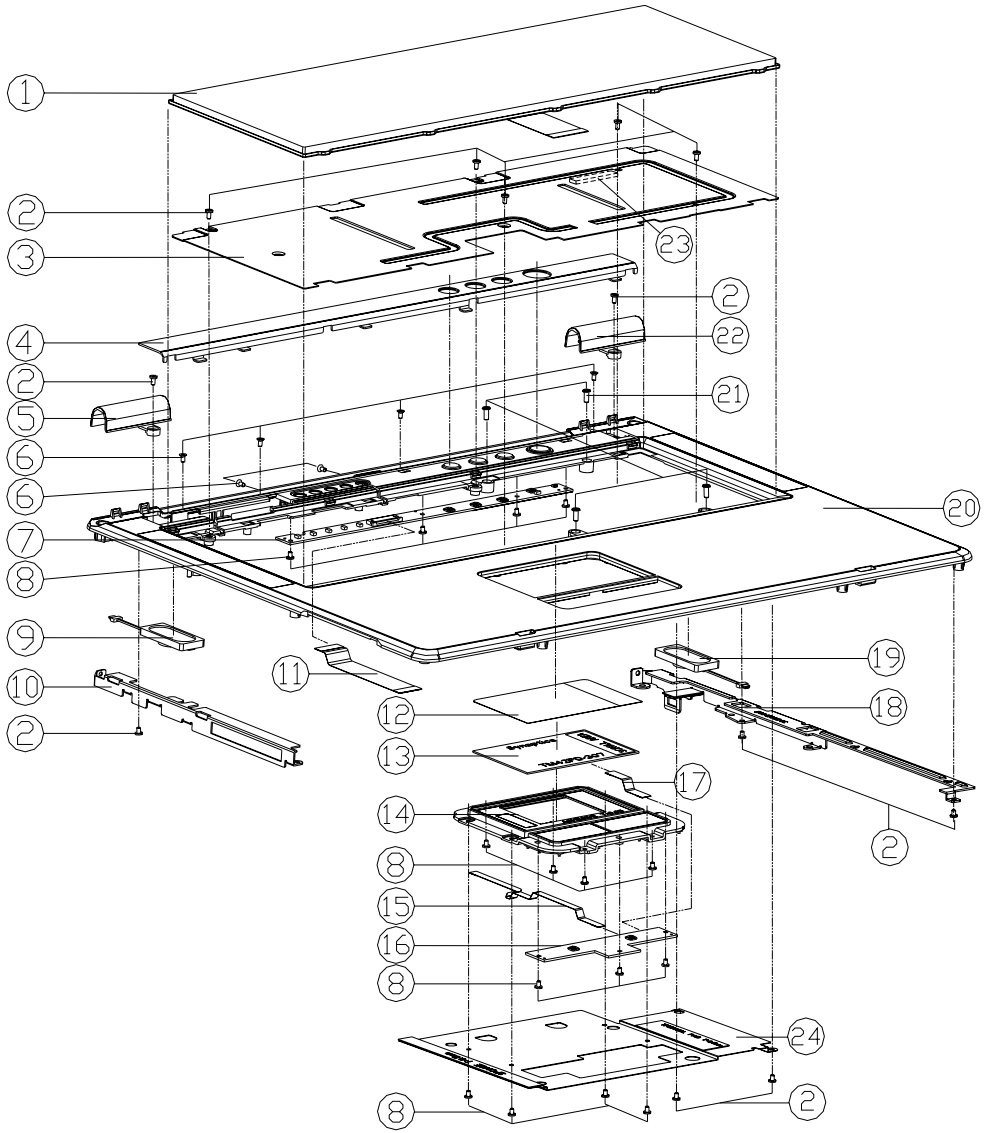

ITEM	PART NAME	PART NO	REMARK
1	KEYBOARD	80-D90T0-010-1	
2	SCREW M2*4L I BZ ICT GTY-PATCH	35-C6120-4RB	
3	KEYBOARD SHIELDING(AL 0.5MM)	33-D90T7-013	
4	CENTER COVER MODULE	42-D90T2-102	
5	HINGE COVER+GASKET MODULE(L)	42-D90TY-401	
6	SCREW M2*4L F NI ICT NY	35-21120-4RA	
7	SWITCH BOARD	77-D90TS-D05	
8	SCREW M2*3L K1 NI ICT NY (Dd=ø3.5,Dt=0.3)	35-B1120-3RE	
9	SPK.WITH CABLE 50MM,1W,8 OHM, 35N(6B2, L	23-5A410-501	
10	HINGE BRACKET(L) 無鉛	33-D90T1-091	
11	FFC CABLE FOR M/B TO SWITCH BOARD 0.6 PITC	43-D90T0-060	
12	T/P MYLAR 無鉛	40-D90T2-010	
13	TOUCHPAD SYNAPTICS TM42P-307 D900T	49-D90T2-010	
14	G/P HOLDER MODULE 無鉛	42-D90T2-704	
15	FFC CABLE FOR M/B TO CLICK BOARD 142.5MM 4	43-D90T0-090	
16	CLICK BOARD	77-D90T2-D05	
17	FFC CABLE FOR CLICK BOARD TO TOUCH PAD 35.	43-D90T0-080	
18	HINGE BRACKET(R) 無鉛	33-D90T1-081	
19	SPK.WITH CABLE 230MM,40*20*8T, 1W,8 OHM	23-5S410-230	
20	TOP CASE MODULE 無鉛	39-D90T2-014	
21	SCREW M2.5*6L K BZ ICT	35-82125-6R0	
22	HINGE COVER(R) 無鉛	42-D90TY-032	
23	GASKET L60*5*3	47-00190-063	
24	TOP CU PLATE	33-D90T2-030	

Figure A - 1
Top (D900T)

Bottom (D900T)

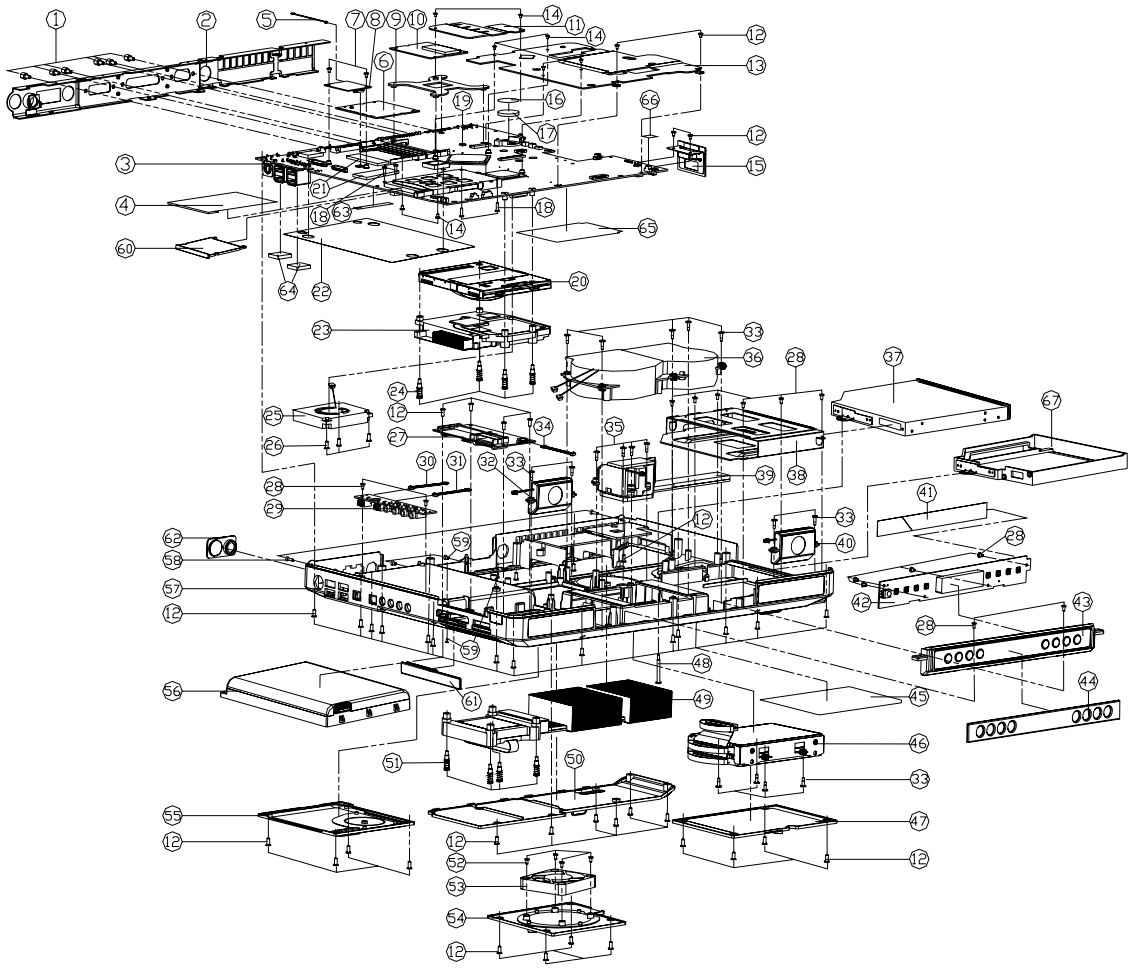

Figure A - 2
Bottom (D900T)

ITEM	PART NAME	PART NO	REMARK
1	HEX STUDS(SUM22 NI-PL) 10MM GTY-PATCH	34-07009-012	
2	IO BRACKET	33-D90TS-011	
3	MAIN BOARD	77-D90T0-D0X	
4	PCMCIA MYLAR,MYLAR 320	40-32004-000	
5	CABLE FOR MDC,70MM,JAE FI-S25,ACES 85206-0	43-D90TU-010	
6	MINI PCI TV TUNER WITH PHILIPS SAA7126(NTSC,PAL)	88-D90T7-465	
7	SCREW M2*3L K1 NI ICT NY (D=4*3.5,D1=0.3)	35-B1120-3RA	
8	MODEM AZALIA 12 PIN MDC 15 CASTLE(TOMAX)	88-D90T1-531	
9	CPU SUPPORTER 無鉛	33-D90TS-032	
10	WLAN MINI-PCI 3B 802.11G WM1270 D900T	88-D90T2-530	
11	MOSFET SINK D900T 無鉛	33-D90T0-012	
12	SCREW M2.5*6L K BZ ICT	35-82125-6R0	
13	CHIP SINK D900T 無鉛	33-D90T0-021	
14	SCREW M2*3L K1 NI ICT GTY-PATCH 無鉛	35-B1120-3RE	
15	CD-ROM BOARD VD3.0	77-D90TN-D03	
16	MYLAR FOR BATTERY	40-8505M-010	
17	BATTERY 3V 210mA CR2032	23-62015-407	
18	SCREW M2*7.0L K1 NI ICT NY	35-B1120-7RA	
19	PORON 6.5*6.5*2T 無鉛	47-D90TS-010	
20	VGA Board(NV41M) 12L ASS'Y D900T	77-D90TL-D11	Reference Ass'y Bom (99-D90TS-0907)
20	VGA BOARD (NV41M) ASS'Y D900T	77-D90TL-D03	Reference Ass'y Bom (99-D90TS-0907)
21	SPONGE FOR MB 58*25*6T 無鉛	47-0019A-580	
22	MYLAR FOR MB (139*121) 無鉛	40-D90TS-020	
23	D900T VGA HEATSINK MODULE 無鉛	31-D90TN-201	
24	HEX STUD FOR CPU HEATSINK(D=19mm) 22B0	34-2200N-012	
25	D900T VGA FAN(CBL 35*35,2MM 5V 12DA HF35A-05A-HH 5CFM)	23-A5519-231	
26	SCREW M2.5*5L K1 BNI ICT GTY-PATCH	35-B9125-5RB	
27	CARD READER MODULE (D900-USB2.0)FOR D900T	88-D90TE-430	
28	SCREW M2*4L I BZ ICT GTY-PATCH (T=0.8 D=4)	35-C6120-4RB	
29	AUDIO BOARD	77-D90T8-D05	
30	WIRE CABLE FOR M/B TO AUDIO BOARD-FPC 35MM 0.5PMM(WIRE	43-D90T0-0C0	
31	WIRE CABLE FOR M/B TO AUDIO BOARD-AUDIO 70MM 1.5PMM	43-D90T0-0D1	
32	FRONT SPEAKER WITH CABLE 50MM (2W 8OHM 41.0*26.5 2.5MM LIFT)	23-51712-501	
33	SCREW M2*7.5L D1=2.1 L=4.5 S=2.5 K NI ICT NY	35-B1120-750	
34	WIRE CABLE FOR M/B TO CARD READER 80MM D900T	43-D90T0-030	
35	SCREW M2*3.1L D1=2.1 L=7 S=4 K NI ICT NY	35-82120-115	
36	D900T FAN MODULE 無鉛	31-D90TS-100	
37	COMBO ASS'Y (option)	79-D90TX-010	Reference Ass'y Bom (99-D90TS-0707)
37	DVD/RW ASS'Y (option)	79-D90TQ-010	Reference Ass'y Bom (99-D90TS-0607)
37	DVD ASS'Y (option)	79-D90TV-010	Reference Ass'y Bom (99-D90TS-0507)
38	CD-ROM HOLDER 無鉛	33-D90TZ-022	
39	SPK. SUB WOOFER WITH CABLE 50MM(2W,3 OHM,34.5*30.5	23-A5430-501	
40	FRONT SPEAKER WITH CABLE 80MM (2W 8OHM 41.0*26.5 2.5MM HIGH	23-51712-130	
41	FFC CABLE FOR M/B TO AUDIO DJ BOARD 120MM 24PIN	43-D90T0-071	
42	AUDIO DJ BOARD VD3.0	77-D90TY-D05	
43	AUDIO DJ HOLDER MODULE 無鉛	42-D90T8-701	
44	AUDIO DJ COSMETIC PLATE	42-D90T8-080	
45	PRODUCT LABEL D900T 無鉛	45-D90T3-011	
45	W/O HDD ASS'Y IDE D900T	79-D90T1-010	
46	W/O HDD ASS'Y SERATA D900T	79-D90T1-020	
47	D900 HDD COVER MODULE 無鉛	42-D90T1-101	
48	SCREW M2*2.4L D1=2.5 L=2.1 S=3 K NI ICT NY	35-B1120-240	
49	D900T CPU HEATSINK MODULE 無鉛	31-D90TN-102	
50	D900 CPU COVER MODULE 無鉛	42-D90T3-301	
51	SCREW M2*4.8*4T d=3.5 L=7.5 S=2.5 K NI ICT NY(SP8NG)	35-41025-175	
52	SCREW K 2.5*7*M(5.5,1) BNI ICT NY	35-89125-7R0	
53	RAM FAN EC6010LL.05BA	23-A6012-110	
54	D900 RAM COVER MODULE 無鉛	42-D90T3-202	
55	D900 VGA COVER MODULE 無鉛	42-D90T3-101	
55	BAT(?) S LI 14.8V/6.6AH 4S3P I2C(ONLICIL	87-D90TS-496	
55	BAT(?),S.L.I. 14.8V, 6.6AH I2C 4S3P(SAMSUN	87-D90TS-4D6	
56	BAT(?),S.L.I. 14.8V, 6.6AH I2C 4S3P(SAMSUN	87-D90TS-4A6	
57	BOTTOM CASE MODULE 無鉛	39-D90T3-011	
58	SCREW M2*8L F NI ICT NY	35-21120-8RA	
59	SCREW M2*4L F NI ICT NY	35-21120-4RA	
60	PCMCIA DUMMY CARD 無鉛	42-D90TP-010	
61	SAFETY RUBBER FOR CARD READER	47-D87PR-010	
62	TV TUNNER SAFETY RUBBER	47-D90T3-070	
63	WARRANTY PASTER 40*6	45-D90TS-010	
64	GASKET 10*15*2T	47-00190-155	
65	PCMCIA MYLAR,MYLAR 320	40-32004-000	
66	MYLAR FOR MB 15*15	40-D90TS-040	
67	ODD DUMMY CASE ASS'Y D900T	79-D90TZ-000	(option)

LCD (D900T)

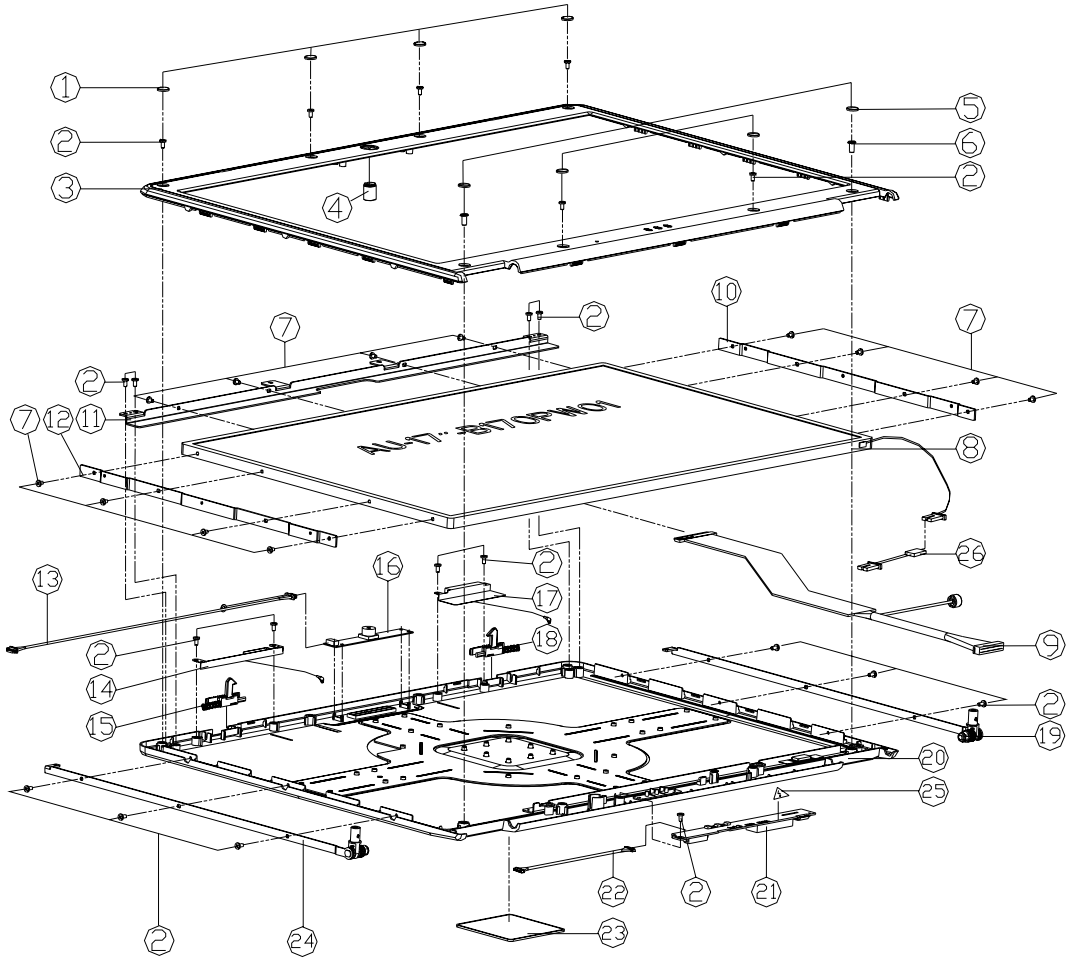

ITEM	PART NAME	PART NO	REMARK
1	LCD TOP RUBBER	47-D90T1-011	
2	SCREW M2*4L I BZ ICT GTY-PATCH	35-C6120-4RB	
3	DISPLAY FRONT CASE MODULE	39-D90T1-013	
4	VIDEO CAMERA RUBBER	47-D90T1-030	FOR W/CCD
5	LCD DOWN RUBBER	47-D90T1-020	
6	SCREW M3*6L K1 NI ICT NY	35-B1130-6RA	
7	SCREW M2*3L K1 NI ICT NY	35-B1120-3RA	
8	LCD 17" AU B170PW01(WXGA) 1440*900 7"	50-N7207-G00	
8	LCD 17" LG LP171W01(WXGA,S-GRADE) 1440*900	50-N7265-L00	
8	LCD 17" LG LP171W02-A3(W/GT/IPS) WSXGA+ 1	50-NA269-L00	
9	WIRE CABLE FOR LG LP171W01 318MM 40PIN	43-D90T1-020	
9	WIRE CABLE FOR LG LP171W02 318MM 40PIN	43-D90T1-021	
9	WIRE CABLE FOR AU B170PW01 318MM 40PIN	43-D90T1-030	
10	LG LCD17 BRACKET (R)	33-D90T1-061	FOR LG
10	RIGHT BRACKET OF AU LCD17	33-D90T1-121	FOR AU
11	TOP BRACKET OF LG LCD17	33-D90T1-141	FOR LG
11	TOP BRACKET OF AU LCD17	33-D90T1-111	FOR AU
12	LG LCD17 BRACKET(L)	33-D90T1-071	FOR LG
12	LEFT BRACKET OF AU LCD17	33-D90T1-131	FOR AU
13	WIRE CABLE FOR M/B TO VIDEO CAMERA 375MM 5	43-D90T0-041	
14	ANTENNA PIFA BLUETOOTHPIFA 2.4GHZ L=470MM GR	23-742R4-C80	
15	HOOK KNOB(L) MODULE	42-D90T1-802	
16	VIDEO CAMERA 300K TAS5130D1B 9*9T	88-M12CC-410	
17	ANTENNA WIRELESS LAN DUAL BAND L=580MM BL	23-742R4-C81	
18	HOOK KNOB(R) MODULE	42-D90T1-702	
19	HINGE (R)	33-D90T1-012	
20	DISPLAY BACK CASE MODULE	39-D90T1-024	
21	INVERTER MODULE FOR D700T(MPT)	76-D70TR-001	
22	WIRE CABLE FOR M/B TO INVERTER 220M 12 PI	43-D90T0-052	
23	LOGO BASE	42-D90T1-030	
24	HINGE (L)	33-D90T1-022	
25	ELECTRIC SHOCK CAUTION 82H	45-82004-000	
26	WIRE CABLE CONVERTER(25MM)*	43-D4701-031	

Figure A - 3
LCD (D900T)

Toshiba DVD-ROM Drive (D900T)

Figure A - 4
Toshiba DVD-ROM Drive (D900T)

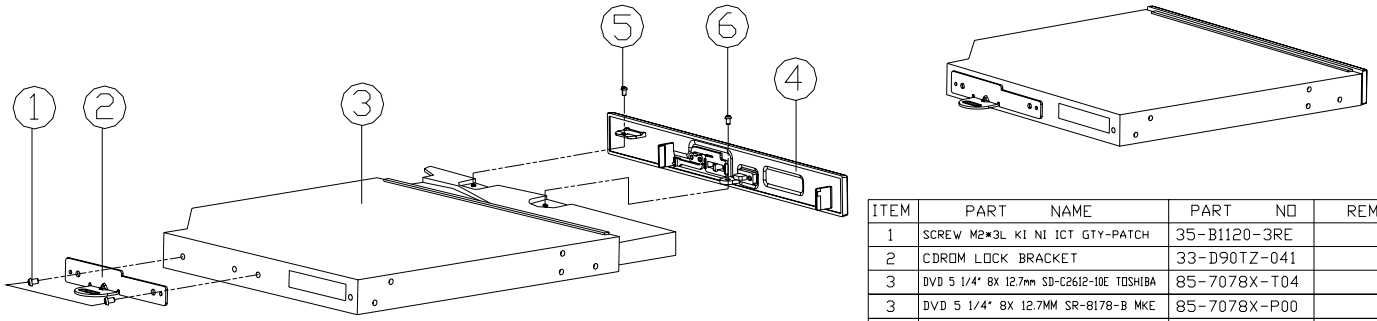

ITEM	PART NAME	PART NO	REMARK
1	SCREW M2*3L KI NI ICT GTY-PATCH	35-B1120-3RE	
2	CDROM LOCK BRACKET	33-D90TZ-041	
3	DVD 5 1/4" 8X 12.7mm SD-C2612-10E TOSHIBA	85-7078X-T04	
3	DVD 5 1/4" 8X 12.7MM SR-8178-B MKE	85-7078X-P00	
4	DVD-ROM BEZEL MODULE TOSHIBA	42-D90TV-101	
4	DVD ROM BEZEL MODULE MKE	42-D90TV-200	
5	SCREW M1.7*3.5L K BZ TAP	35-86717-3R5	FOR KME
6	SCREW M1.7*2.5L	35-B4917-2R5	FOR KME

QSI Combo Drive (D900T)

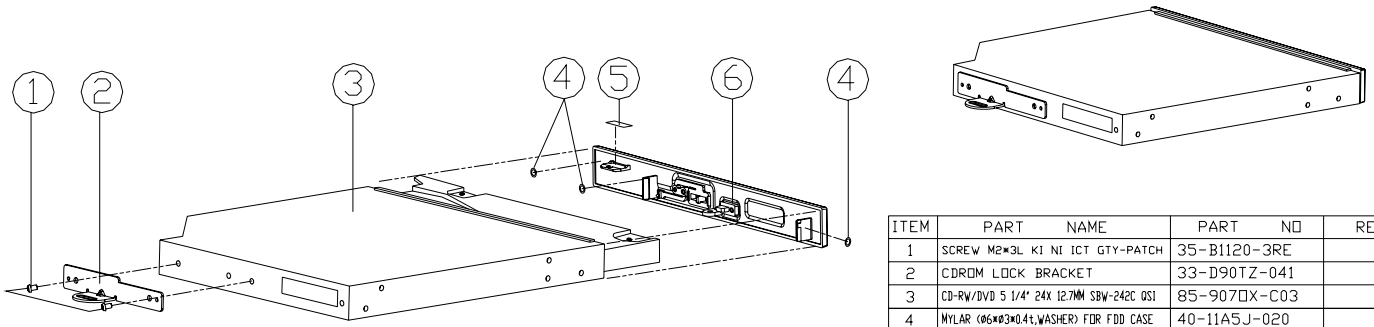

ITEM	PART NAME	PART NO	REMARK
1	SCREW M2*3L KI NI ICT GTY-PATCH	35-B1120-3RE	
2	CDROM LOCK BRACKET	33-D90TZ-041	
3	CD-RW/DVD 5 1/4" 24X 12.7MM SBW-242C QSI	85-907□X-C03	
4	MYLAR (Ø6*Ø3*0.4t,WASHER) FOR FDD CASE	40-11A5J-020	
5	MYLAR (6*3*0.3t) FOR L295UB	40-00150-603	
6	COMBO BEZEL MODULE QSI	42-D90TX-100	

Figure A - 5
QSI Combo Drive (D900T)

DVD Dual Drive (D900T)

Figure A - 6
DVD Dual Drive (D900T)

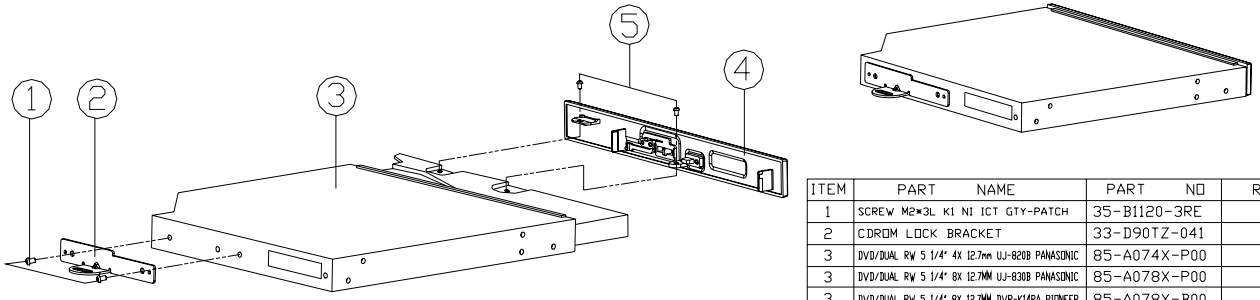

ITEM	PART NAME	PART NO	REMARK
1	SCREW M2*3L K1 NI ICT GTY-PATCH	35-B1120-3RE	
2	CDROM LOCK BRACKET	33-D90TZ-041	
3	DVD/DUAL RW 5 1/4" 4X 12.7mm UJ-820B PANASONIC	85-A074X-P00	
3	DVD/DUAL RW 5 1/4" 8X 12.7MM UJ-830B PANASONIC	85-A078X-P00	
3	DVD/DUAL RW 5 1/4" 8X 12.7MM DVR-K14RA PIONEER	85-A078X-B00	
4	DVD RW BEZEL MODULE PANASONIC	42-D90TQ-101	
4	DVD DUAL BEZEL MODULE PIONEER	42-D90TQ-200	
5	SCREW M1.7*3.5L K BZ TAP	35-86717-3R5	UJ-820B/UJ-830B

Hard Disk Drive (D900T)

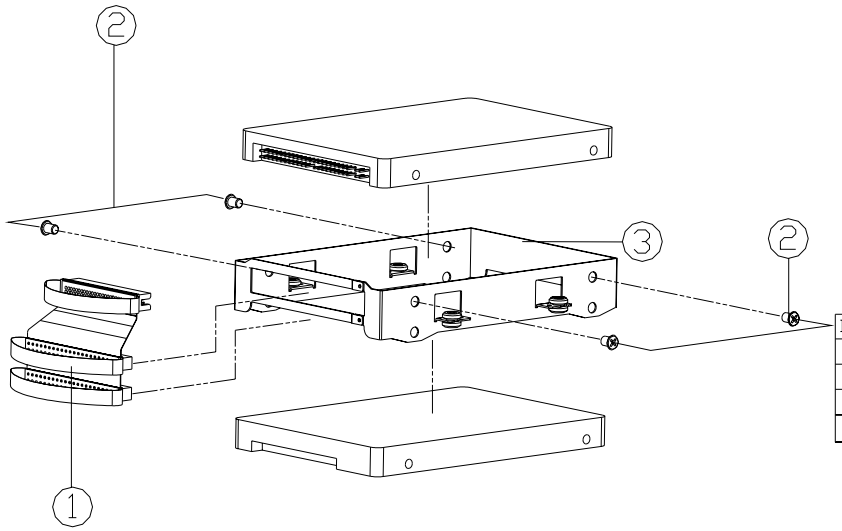

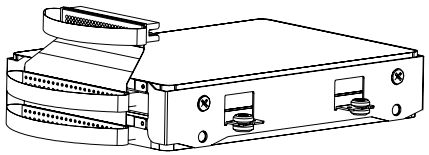

ITEM	PART NAME	PART NO	REMARK
1	FPC CABLE 1 TO 2 SATA HDD CABLE FOR D900T	43-D90T0-0B0	
1	FPC CABLE 1 TO 2 HDD CABLE FOR D900T	43-D90T0-0A0	
2	SCREW M3*4L KI BZ ICT NY (D=4.8 T=0.5)	35-B6130-4RB	
3	HDD BRACKET MODULE	33-D90TI-101	

Figure A - 7
HDD Drive (D900T)

Appendix B:Schematic Diagrams

This appendix has circuit diagrams of the ***D900T*** notebook's PCB's. The following table indicates where to find the appropriate schematic diagram.

Table B - 1
Schematic Diagrams

Diagram - Page	Diagram - Page	Diagram - Page
System Block Diagram - Page B - 2	*PCMCIA TI1410 - Page B - 17*	*System Power - Page B - 32*
Clock Generator - Page B - 3	*PCMCIA Power / Fan Con - Page B - 18*	*Charger - Page B - 33*
CPU-1 Host/Power - Page B - 4	*PCI 1394a TI TSB43AB22 - Page B - 19*	*Audio Board - Page B - 34*
CPU-2 GTL+ / GND - Page B - 5	*GLAN RTL110SBL - Page B - 20*	*Audio DJ Board - Page B - 35*
GMCH-1 Host/ PCI-E/ DMI - Page B - 6	*SATA RAID PDC20378 - Page B - 21*	*CD-ROM Board - Page B - 36*
GMCH-2 DDR2 - Page B - 7	*LPC Super I/O NS87393 - Page B - 22*	*Click Board - Page B - 37*
GMCH-3 PWR / GND - Page B - 8	*LPT / COM Port CON / Thermistor - Page B - 23*	*Switch Board - Page B - 38*
DDR2 DIMM-A - Page B - 9	*LPC H8 - Page B - 24*	
DDR2 DIMM-B - Page B - 10	*CODEC ALC880 - Page B - 25*	
DDR2 Terminator - Page B - 11	*Audio Jack & ADJ Power - Page B - 26*	
ICH6-1 - Page B - 12	*Audio DJ BBVL+ Controller - Page B - 27*	
ICH6-2 PWR / GND - Page B - 13	*USB / CR / CCD Con / SRS - Page B - 28*	
VGA Daughter Connector - Page B - 14	*Mini-PCI / NC / MDC / BT Con - Page B - 29*	
DVI / TV-Out / Video-In Con - Page B - 15	*VCORE - Page B - 30*	
Panel Con / LED Indicator - Page B - 16	*DDR Power - Page B - 31*	

System Block Diagram

Sheet 1 of 42
System Block Diagram

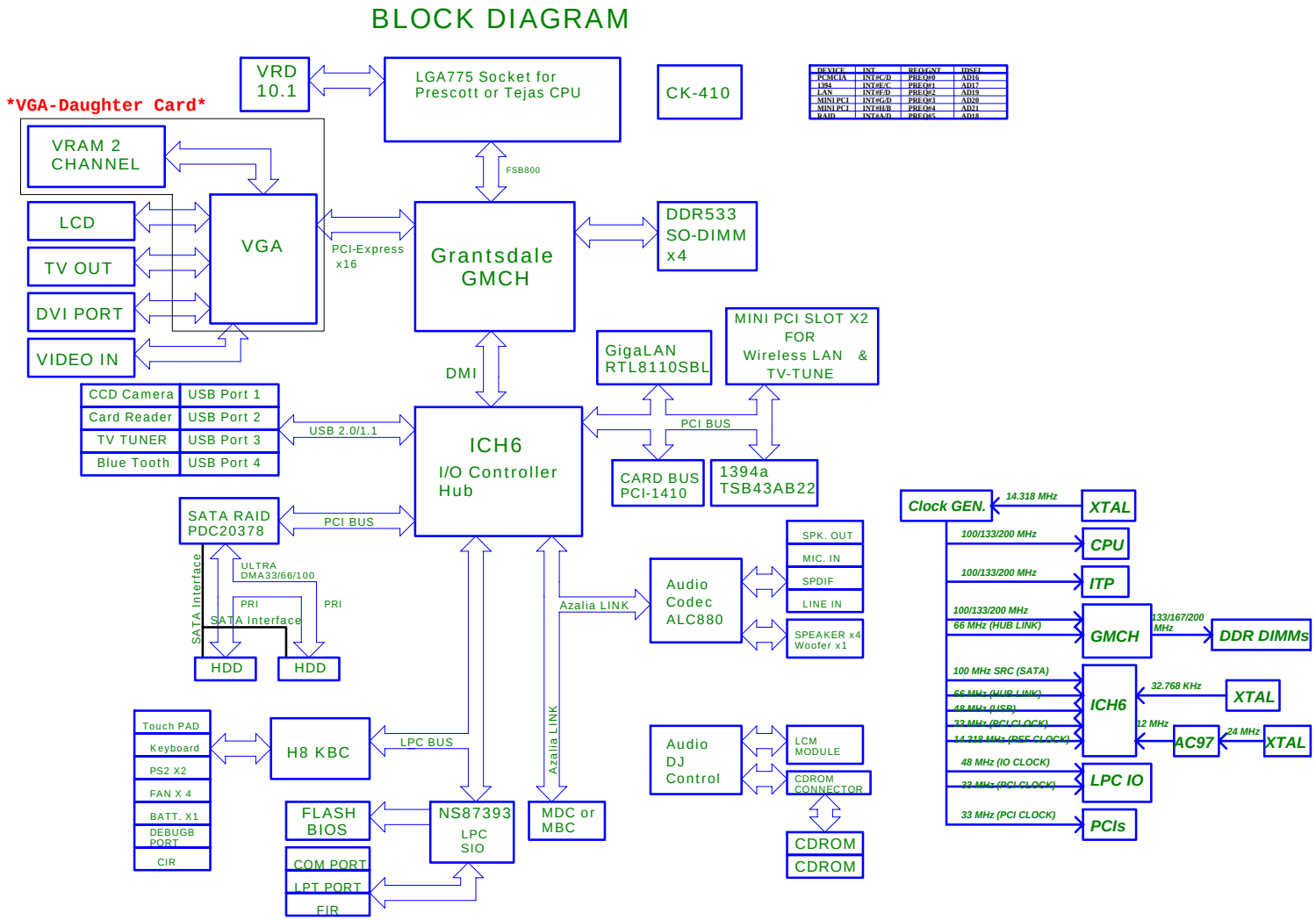

DEVICE	INT	REQ/GNT	IDSEL
PCMCIA	INT#C/D	PREQ#0	AD16
1394	INT#E/C	PREQ#1	AD17
LAN	INT#F/D	PREQ#2	AD19
MINI PCI	INT#G/D	PREQ#3	AD20
MINI PCI	INT#H/B	PREQ#4	AD21
RAID	INT#A/D	PREQ#5	AD18

Clock Generator

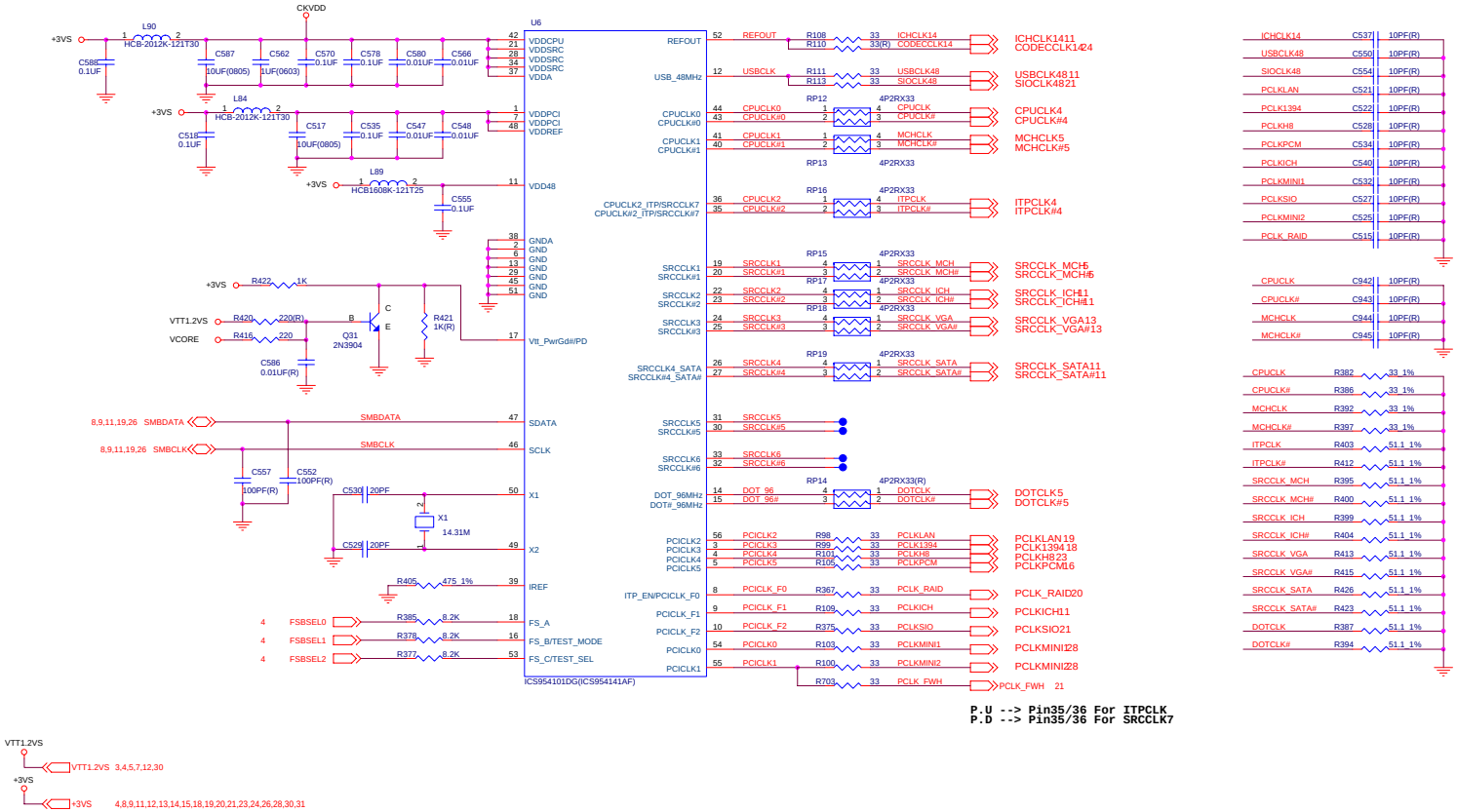

Sheet 2 of 37
Clock Generator

CPU-1 Host/Power

Sheet 3 of 37
CPU Host/Power
1 of 2

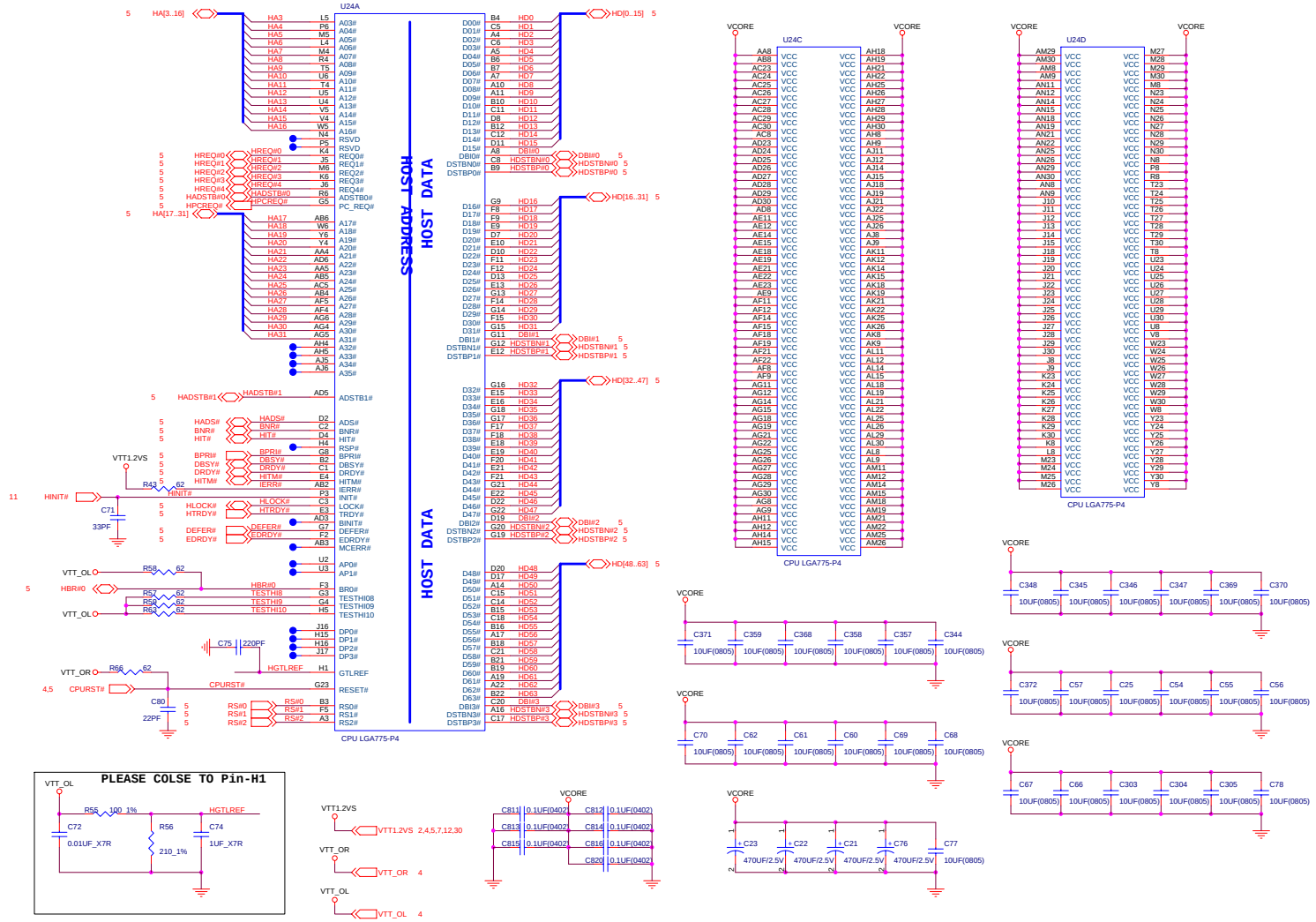

CPU-2 GTL+ / GND

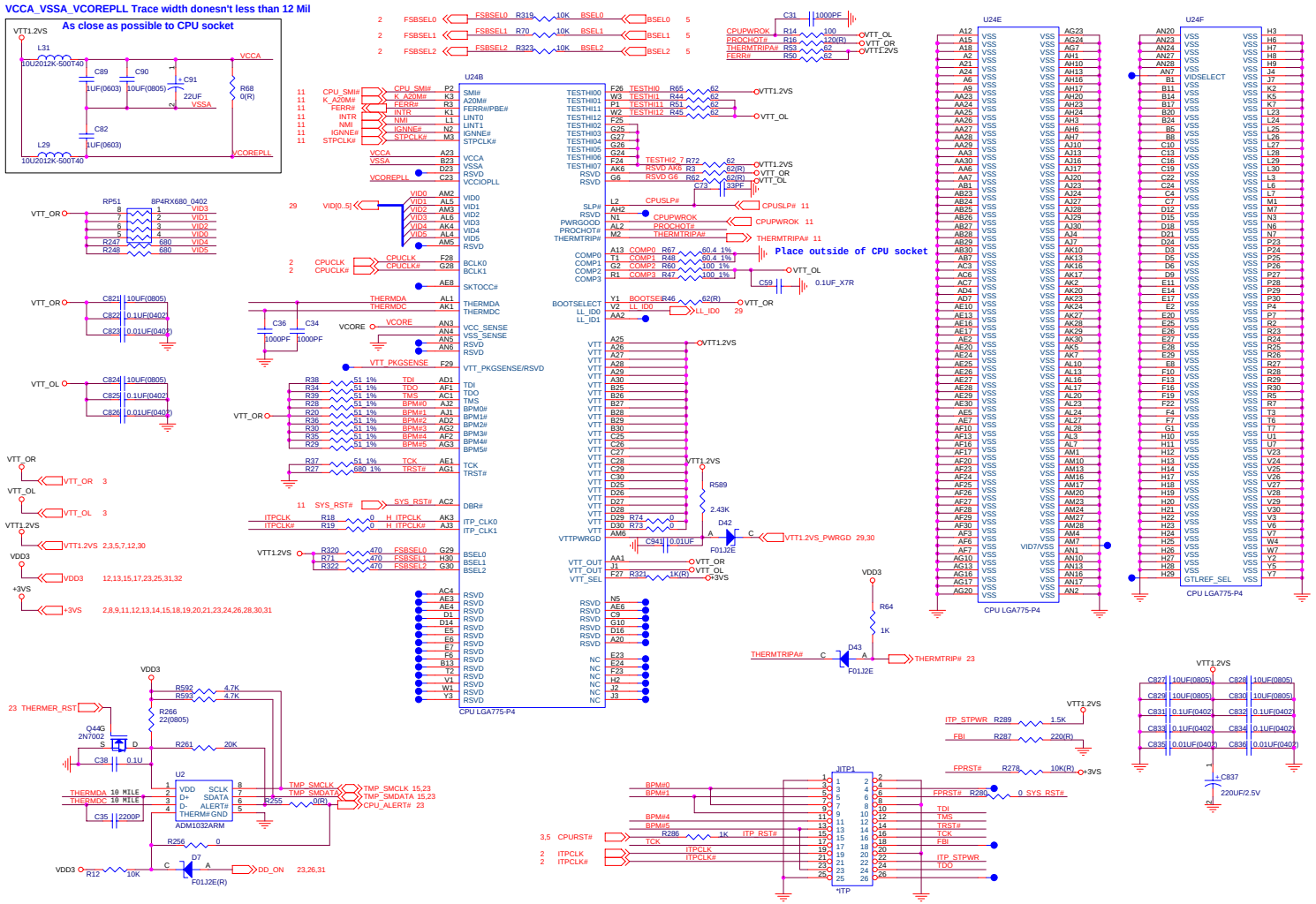

Sheet 4 of 37
CPU GTL+ / GND
2 of 2

GMCH-1 Host/ PCI-E/ DMI

Sheet 5 of 37
GMCH Host/ PCI-E/ DMI
1 of 2

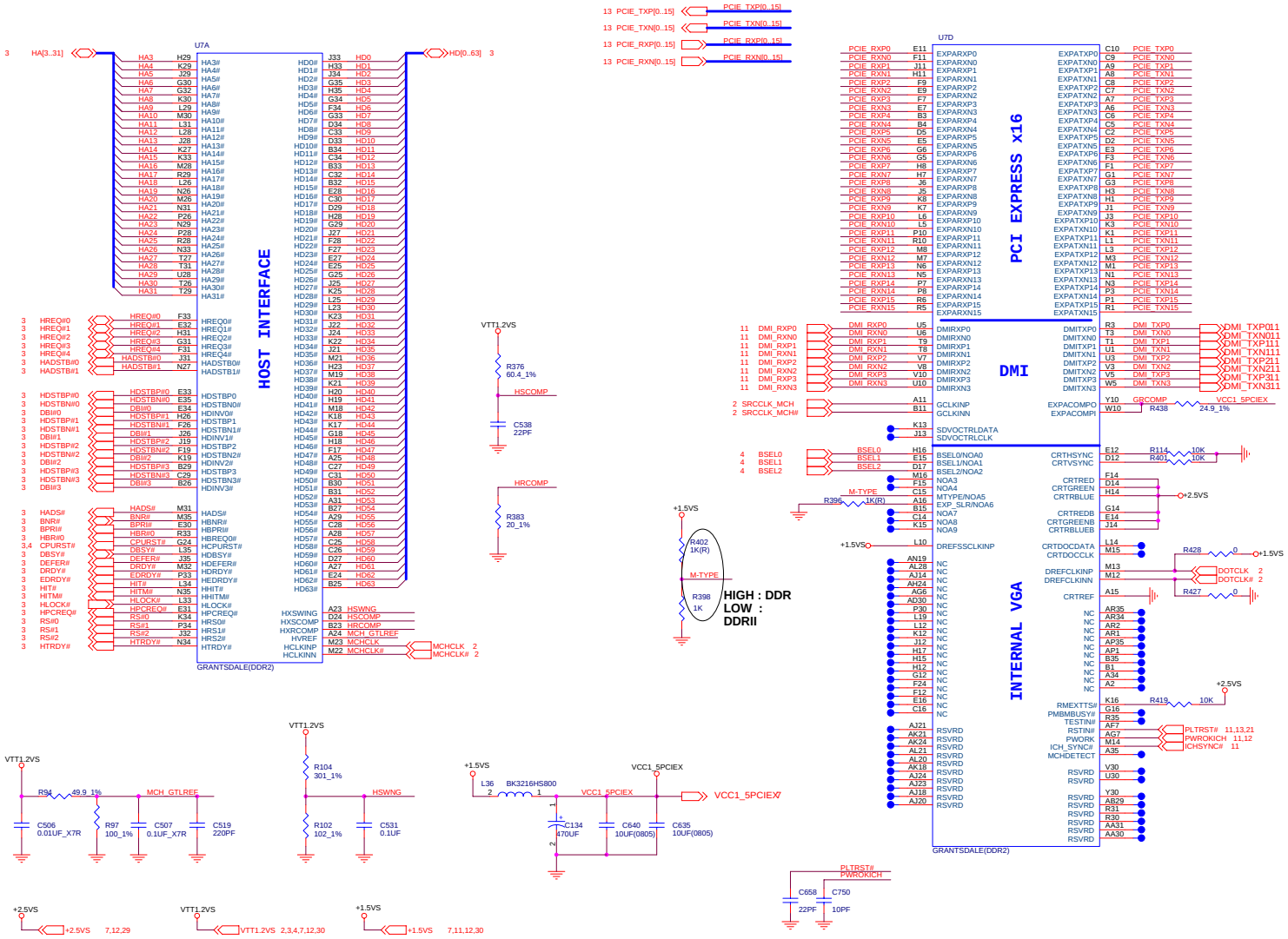

GMCH-2 DDR2

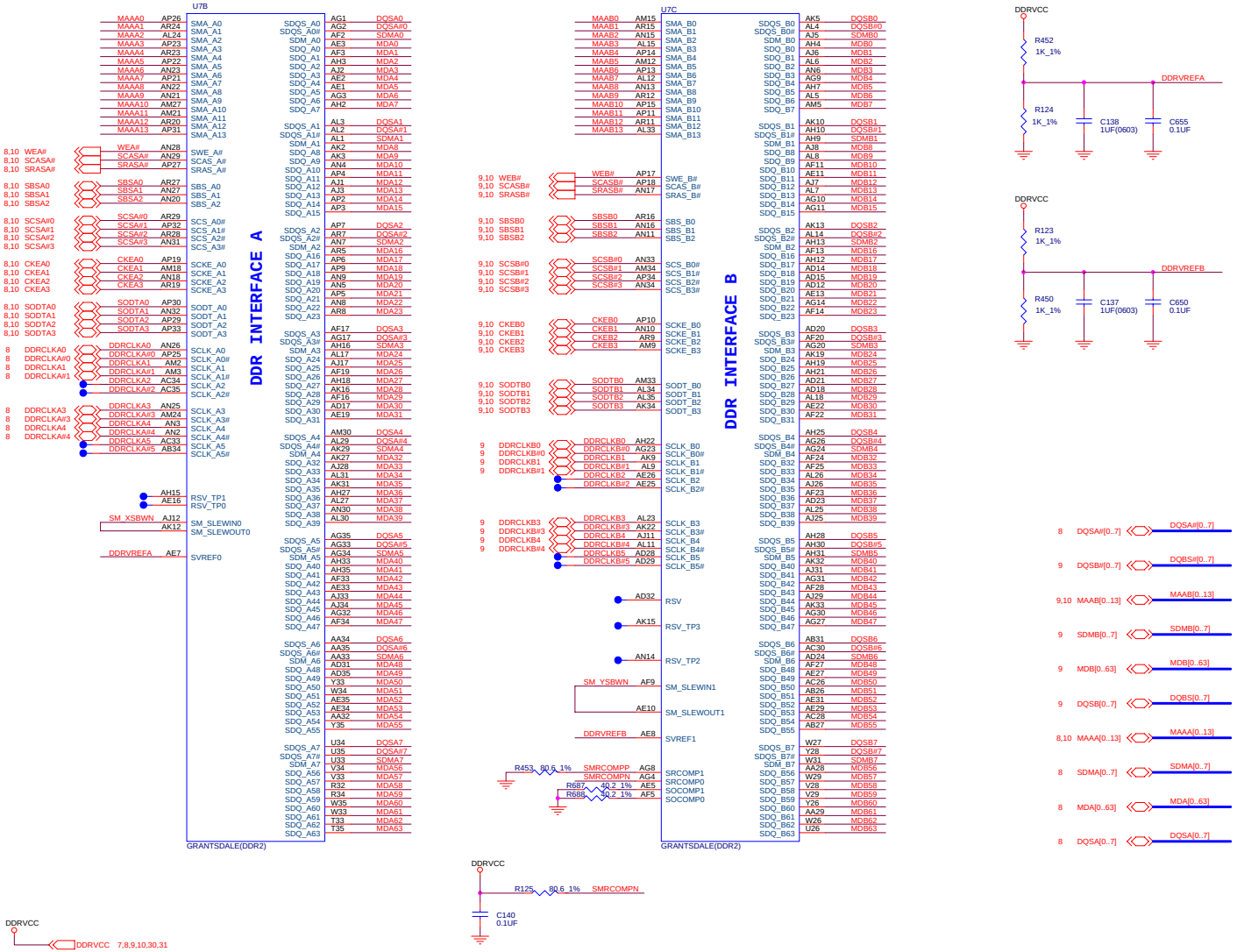

Sheet 6 of 37
GMCH DDR2
2 of 3

GMCH-3 PWR / GND

Sheet 7 of 37
GMCH PWR / GND
3 of 3

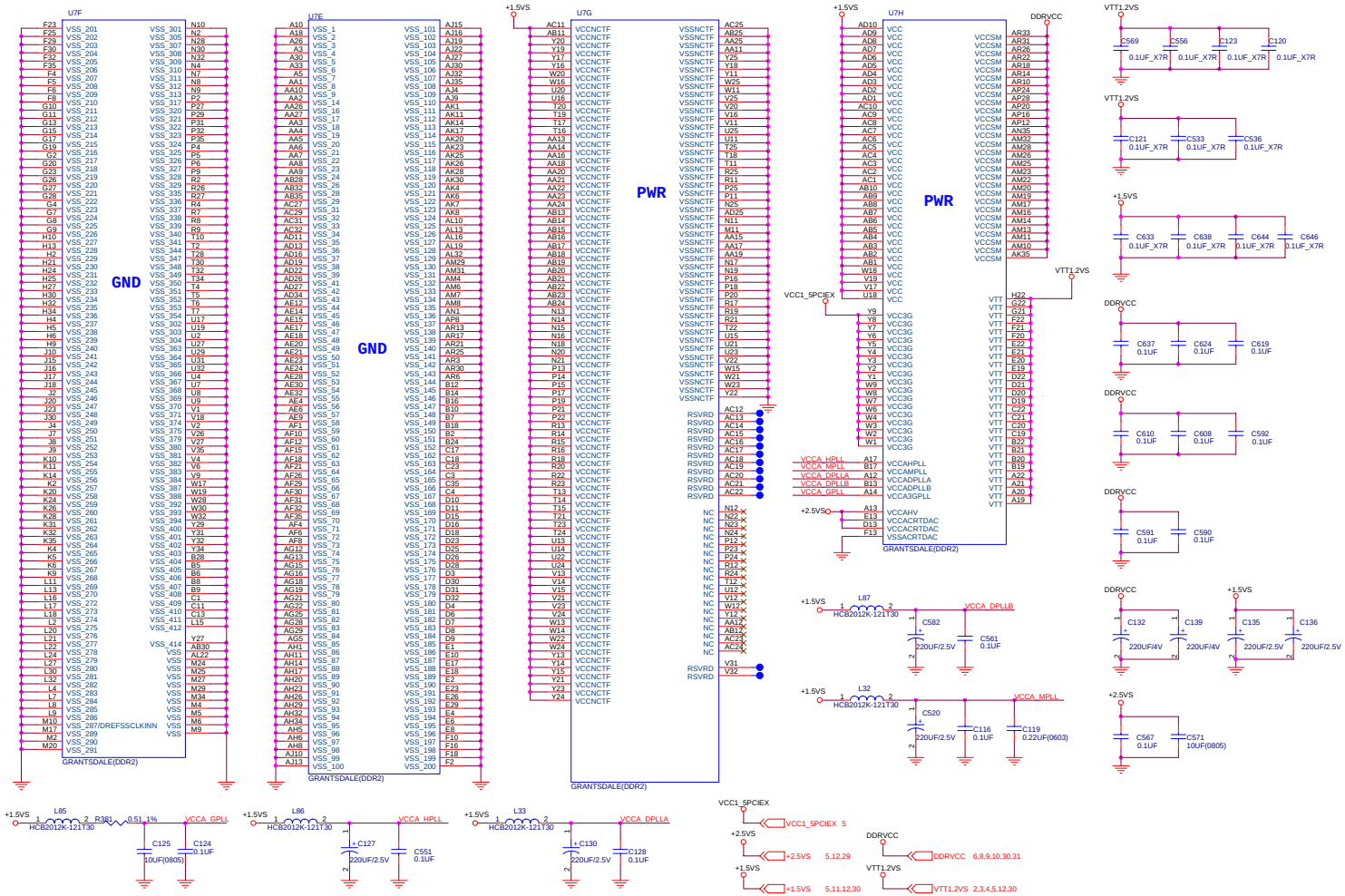

DDR2 DIMM-A

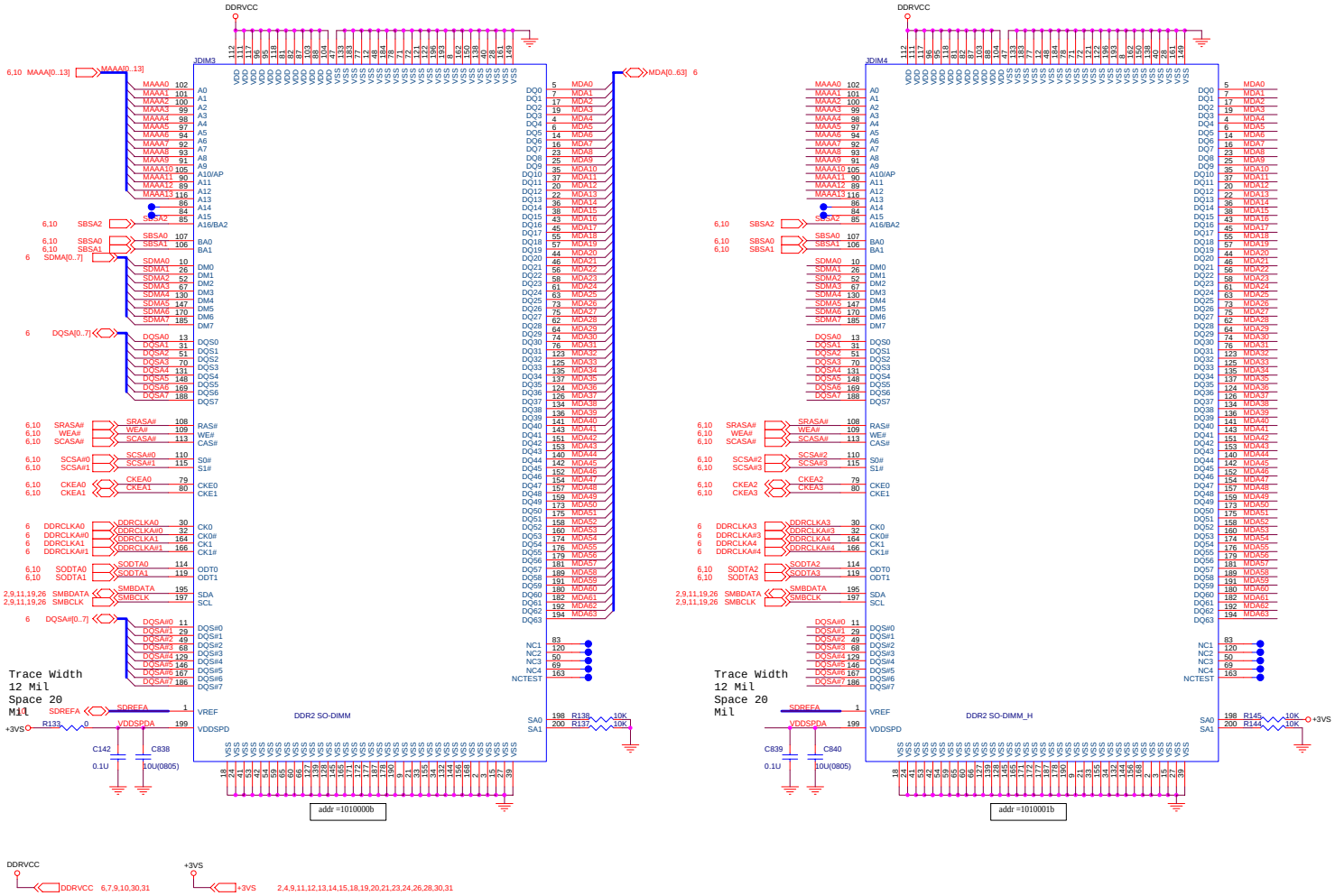

Sheet 8 of 37
DDR2 DIMM-A

DDR2 DIMM-B

Sheet 9 of 37
DDR2 DIMM-B

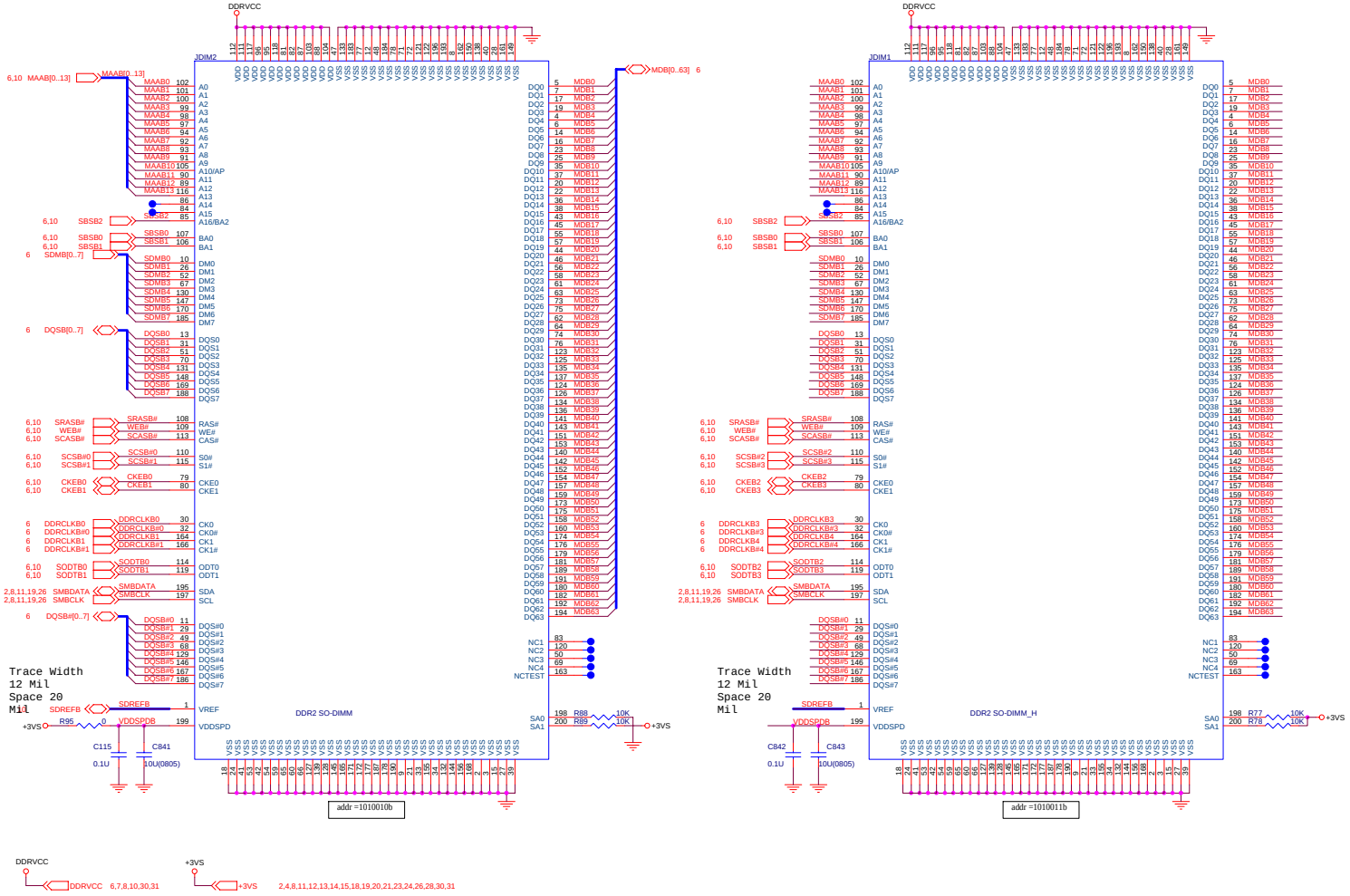

DDR2 Terminator

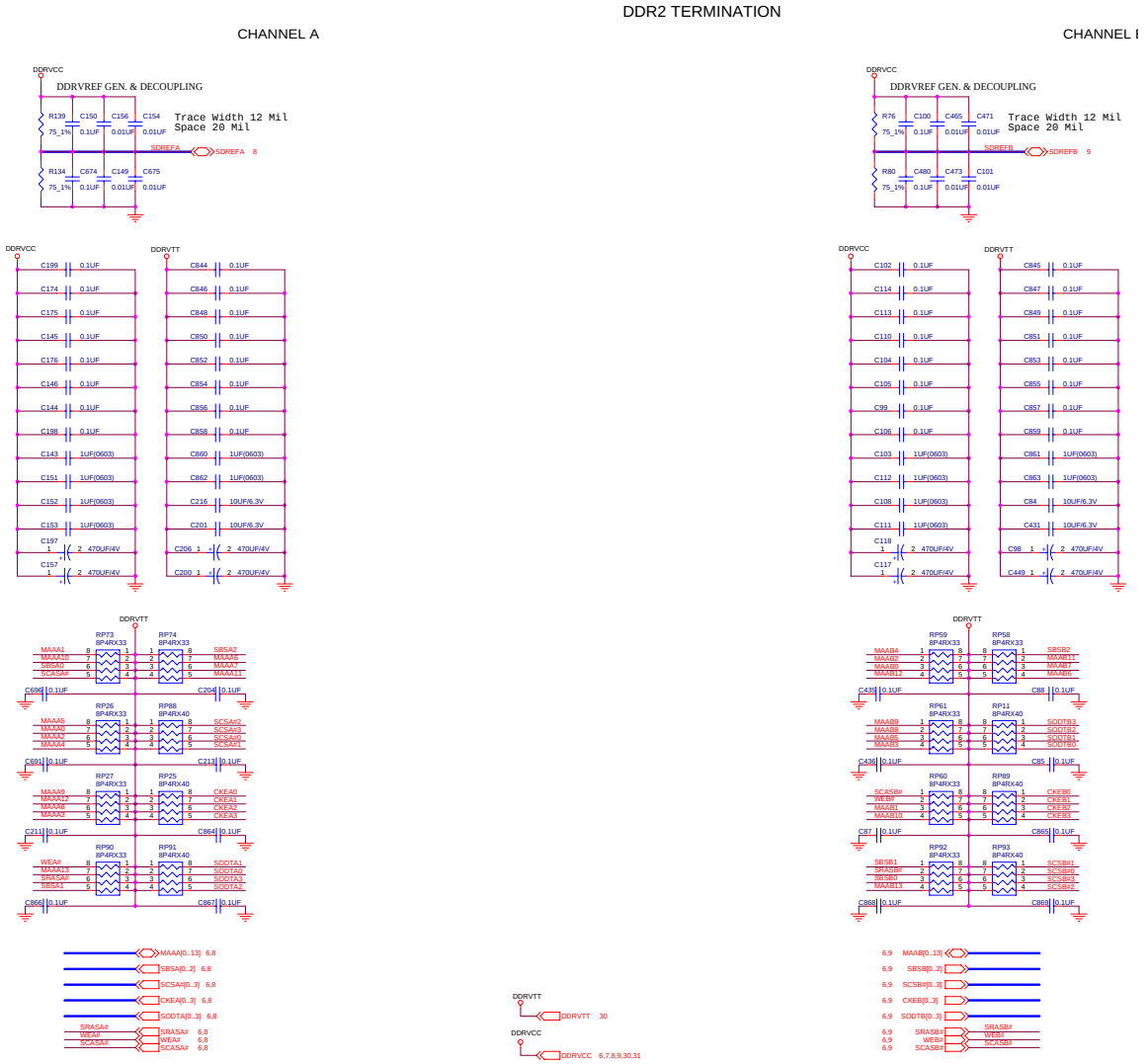

Sheet 10 of 37
DDR2 Terminator

ICH6-1

Sheet 11 of 37
ICH6-1

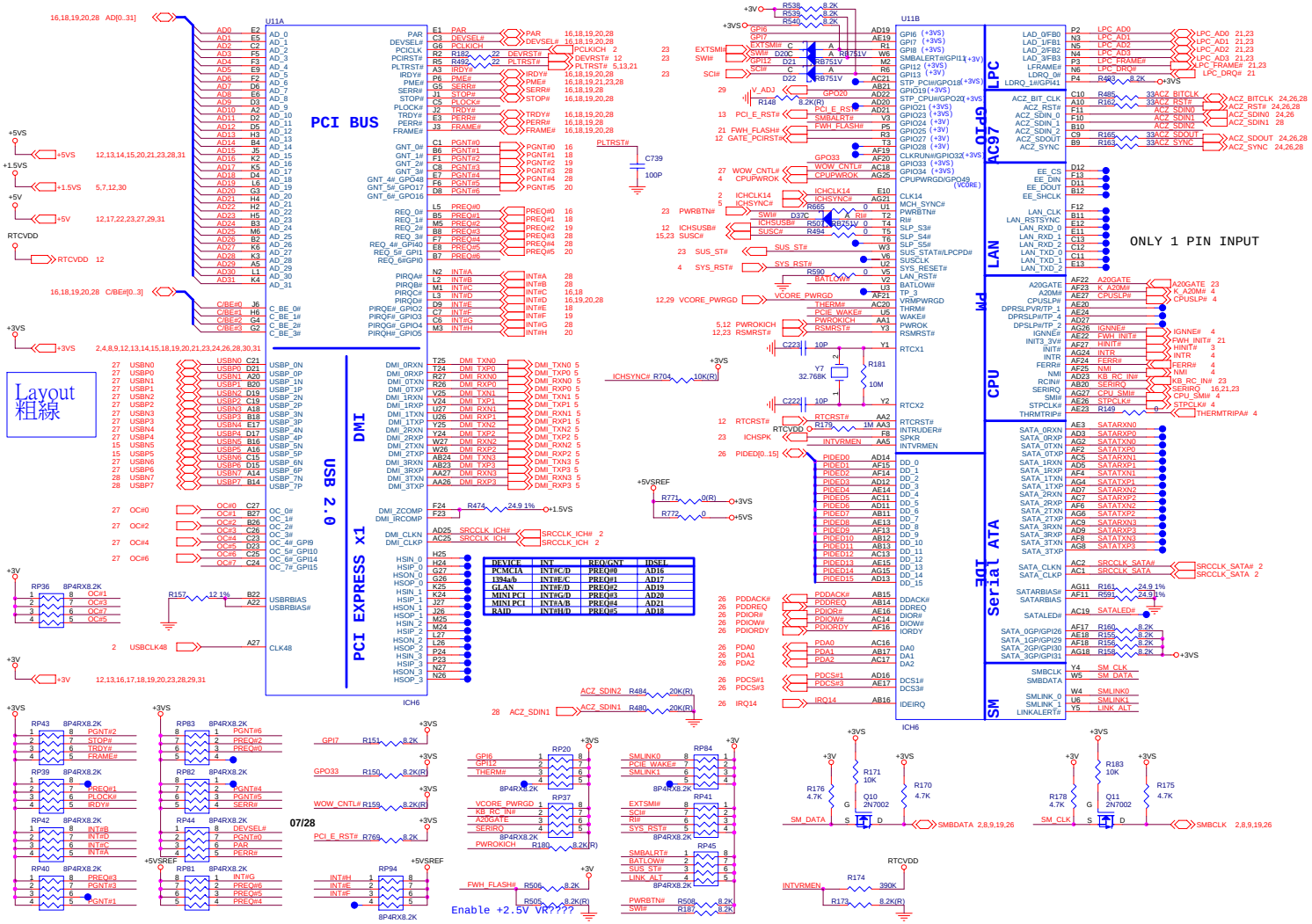

DEVICE	INT	REQ/GNT	IDSEL
PCMCIA	INT#C/D	PREQ#0	AD16
1394a/b	INT#E/C	PREQ#1	AD17
GLAN	INT#F/D	PREQ#2	AD19
MINI PCI	INT#G/D	PREQ#3	AD20
MINI PCI	INT#A/B	PREQ#4	AD21
RAID	INT#H/D	PREQ#5	AD18

ICH6-2 PWR / GND

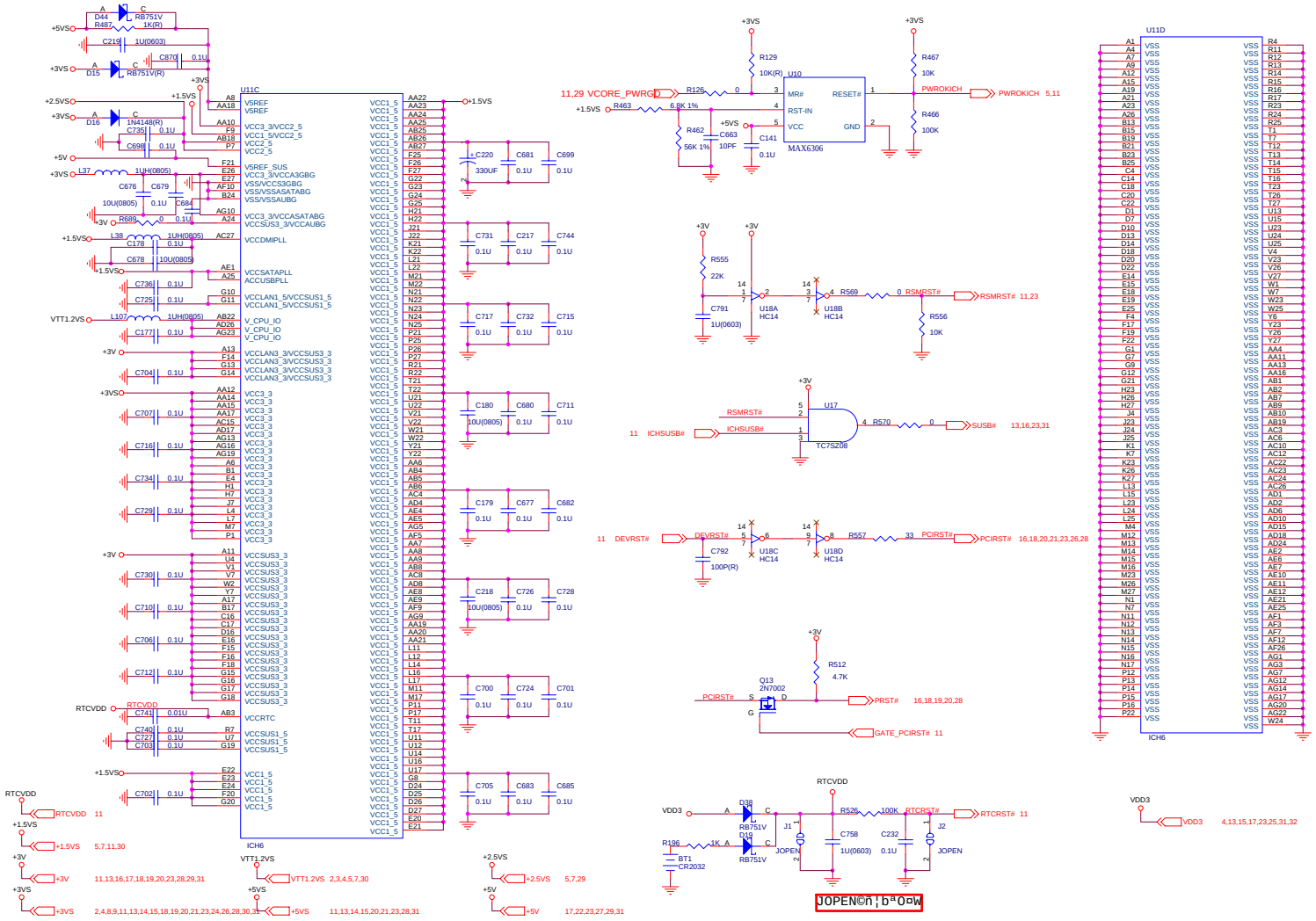

Sheet 12 of 37
ICH6-2 PWR /GND

VGA Daughter Connector

Sheet 13 of 37
VGA Daughter Connector

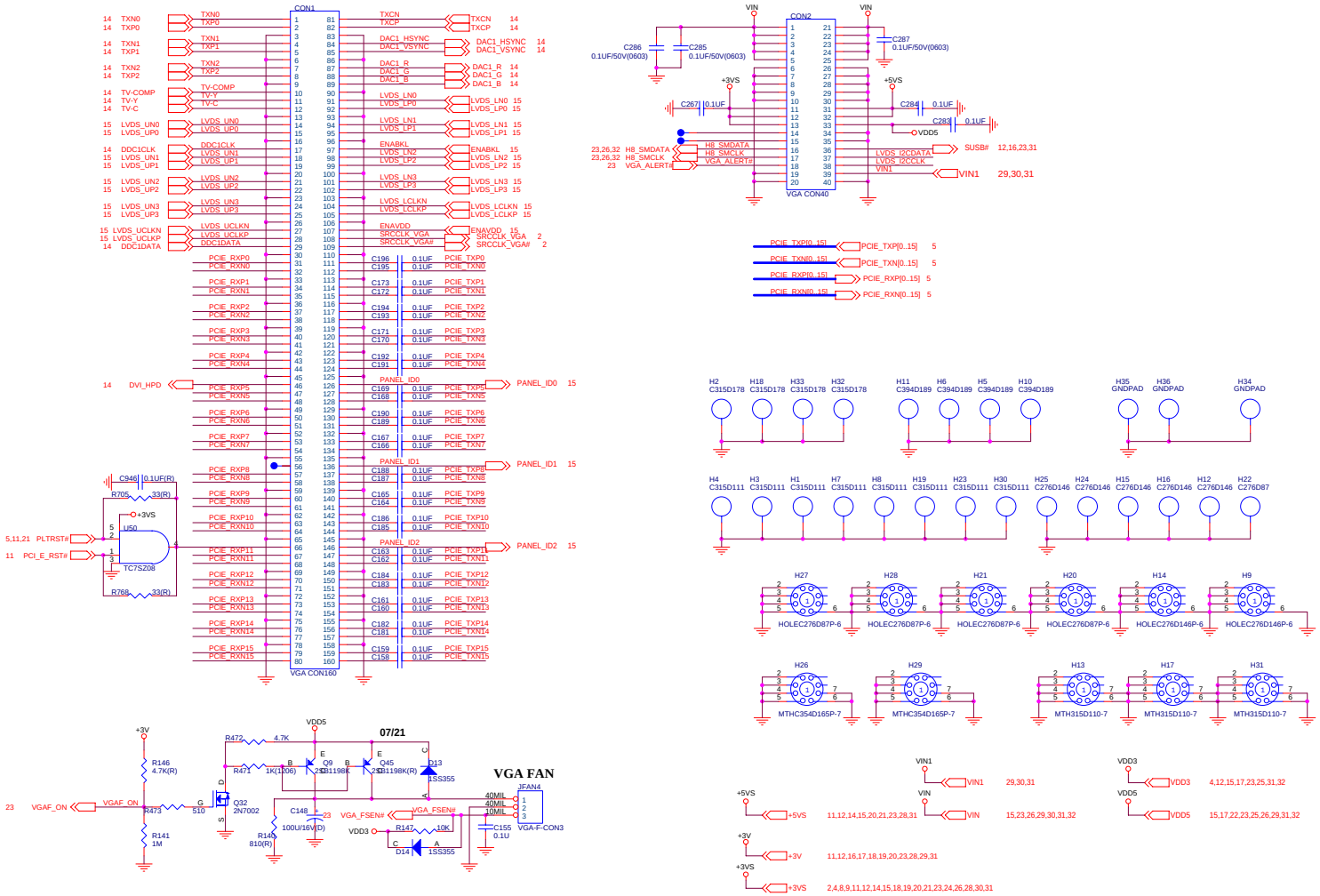

DVI / TV-Out / Video-In Con

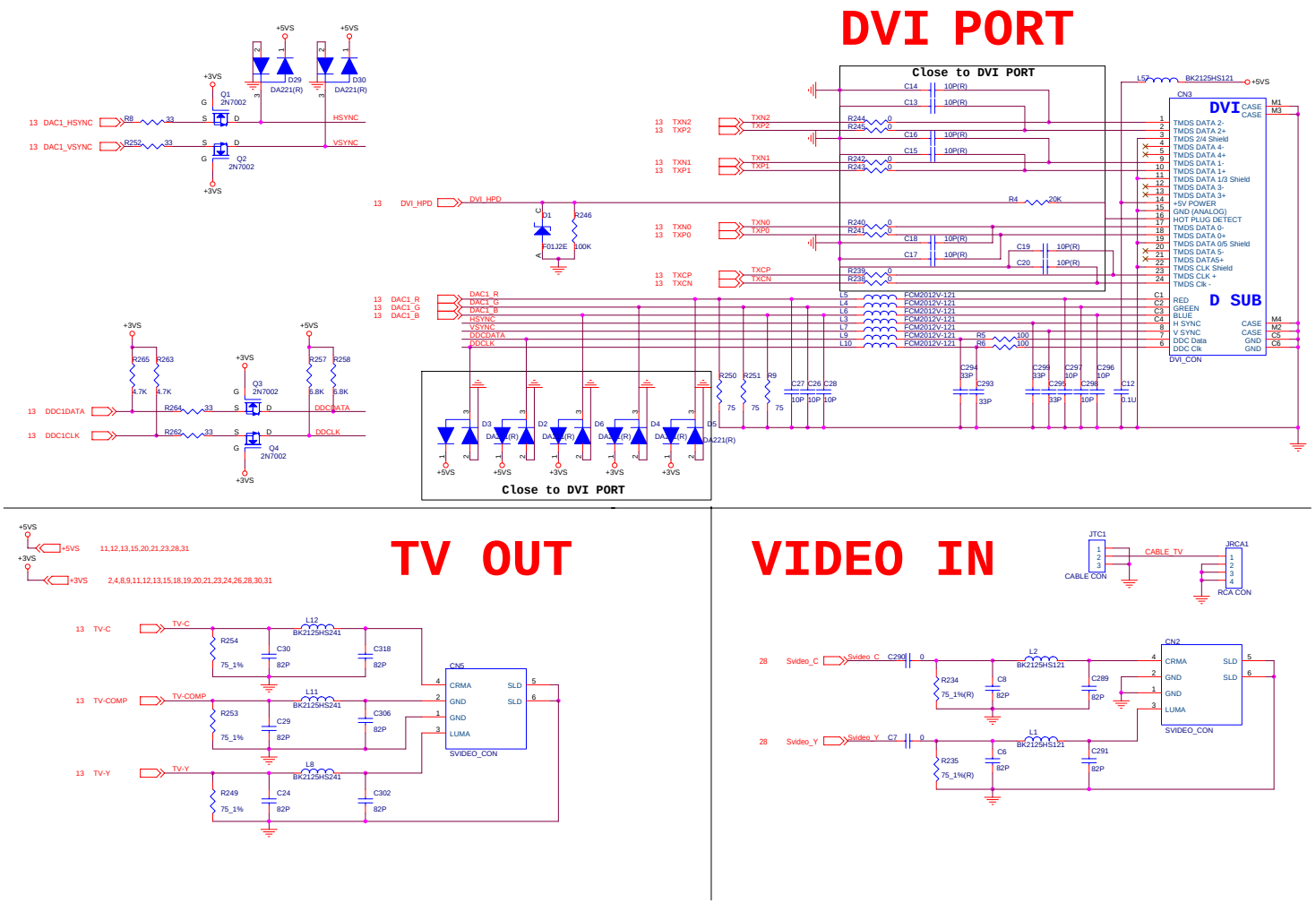

Sheet 14 of 37
DVI / TV-Out /
Video-In Con

Panel Con / LED Indicator

Sheet 15 of 37
Panel Con / LED Indicator

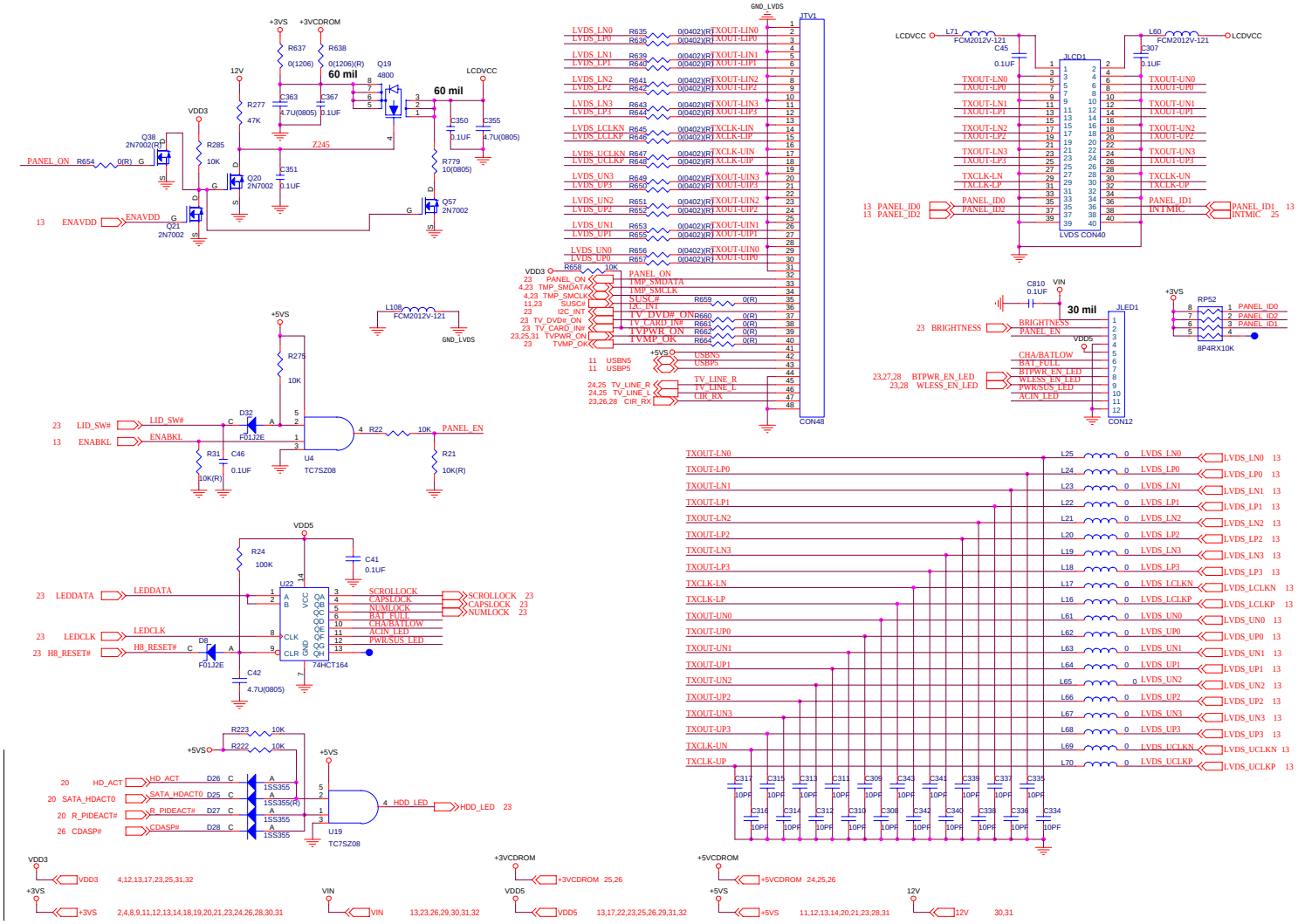

PCMCIA TI1410

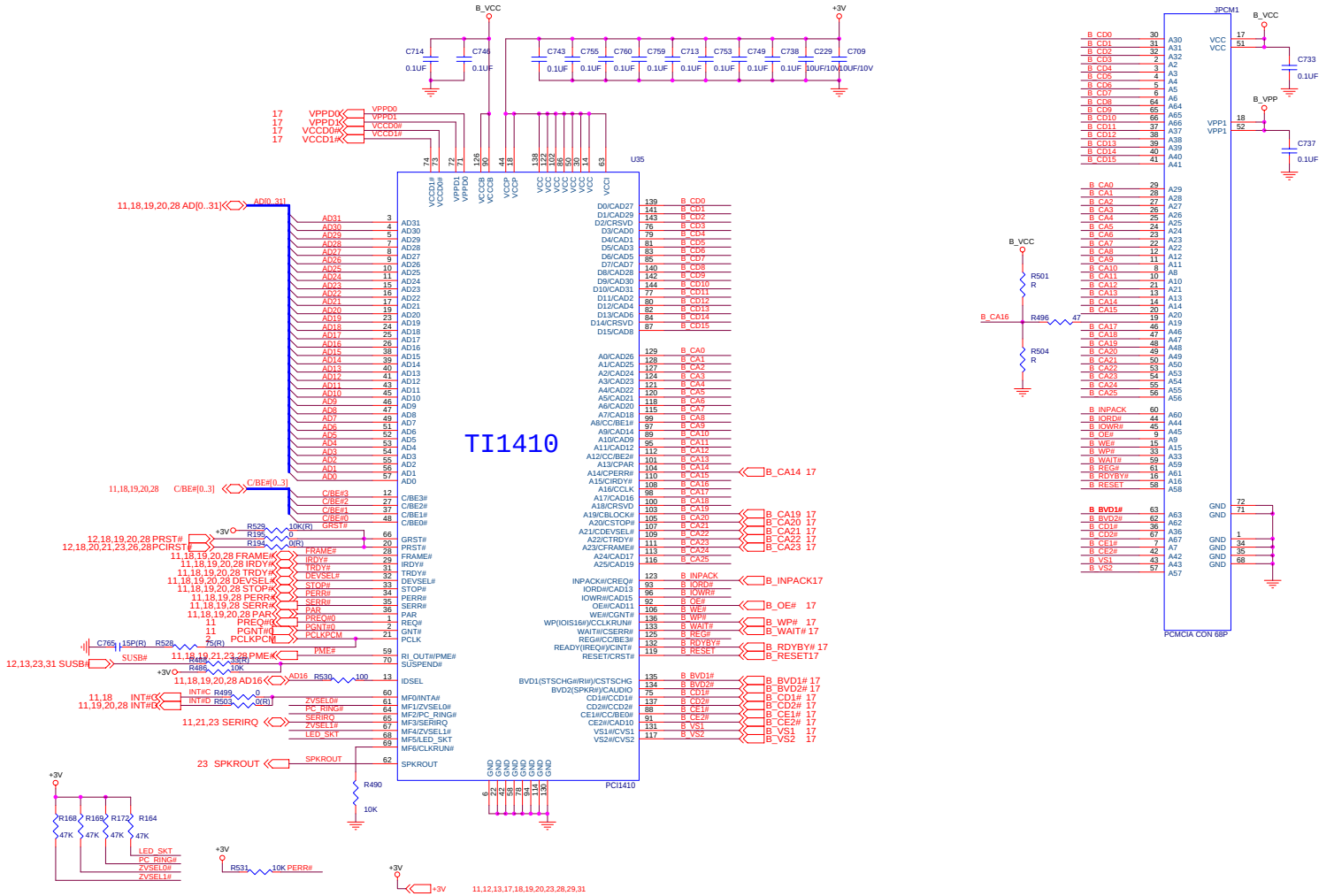

Sheet 16 of 37
PCMCIA TI1410

PCMCIA Power / Fan Con

Sheet 17 of 37
PCMCIA Power / Fan Con

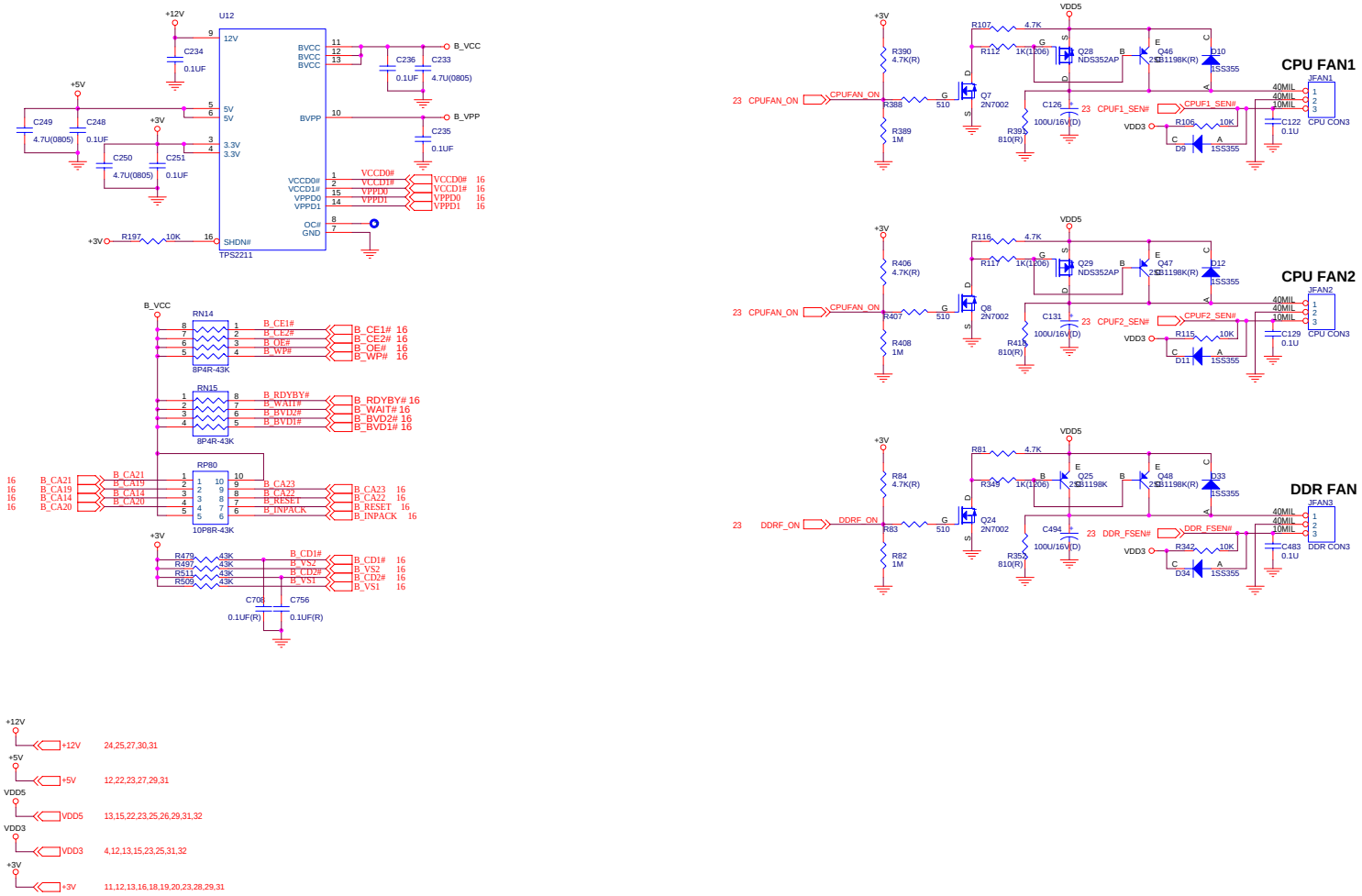

PCI 1394a TI TSB43AB22

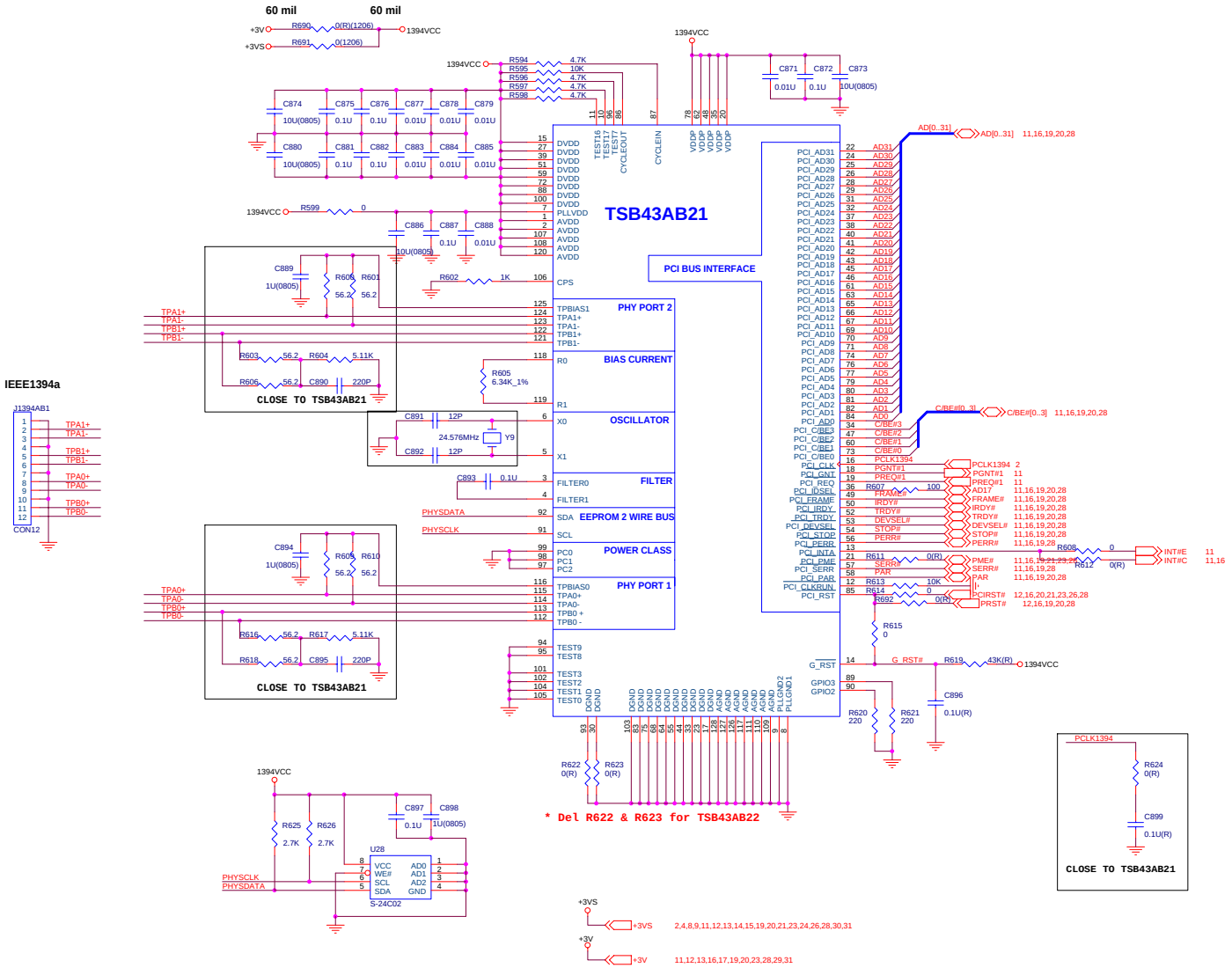

Sheet 18 of 37
PCI 1394a TI
TSB43AB22

B.Schematic Diagrams

GLAN RTL110SBL

Sheet 19 of 37
GLAN RTL110SBL

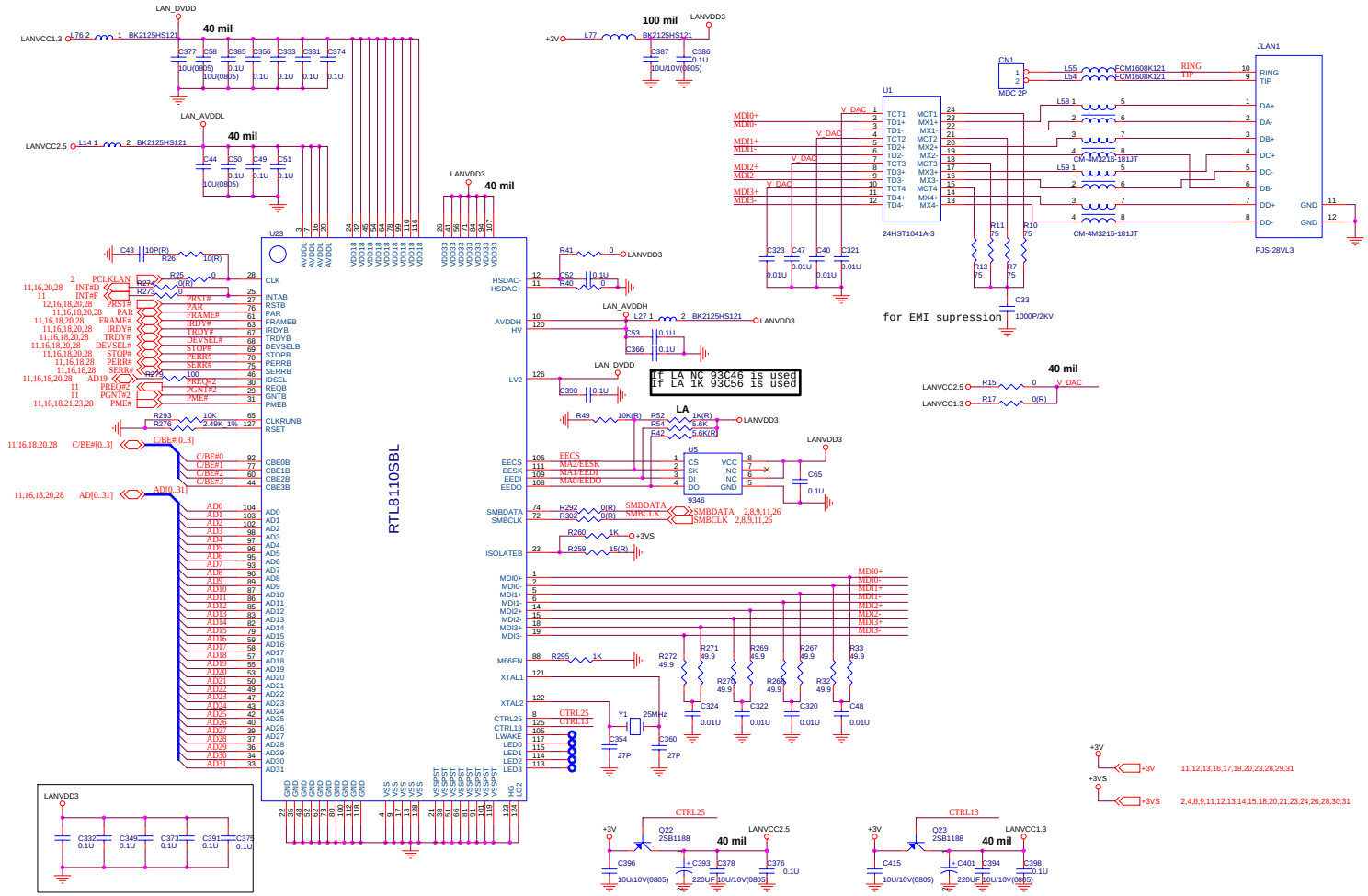

SATA RAID PDC20378

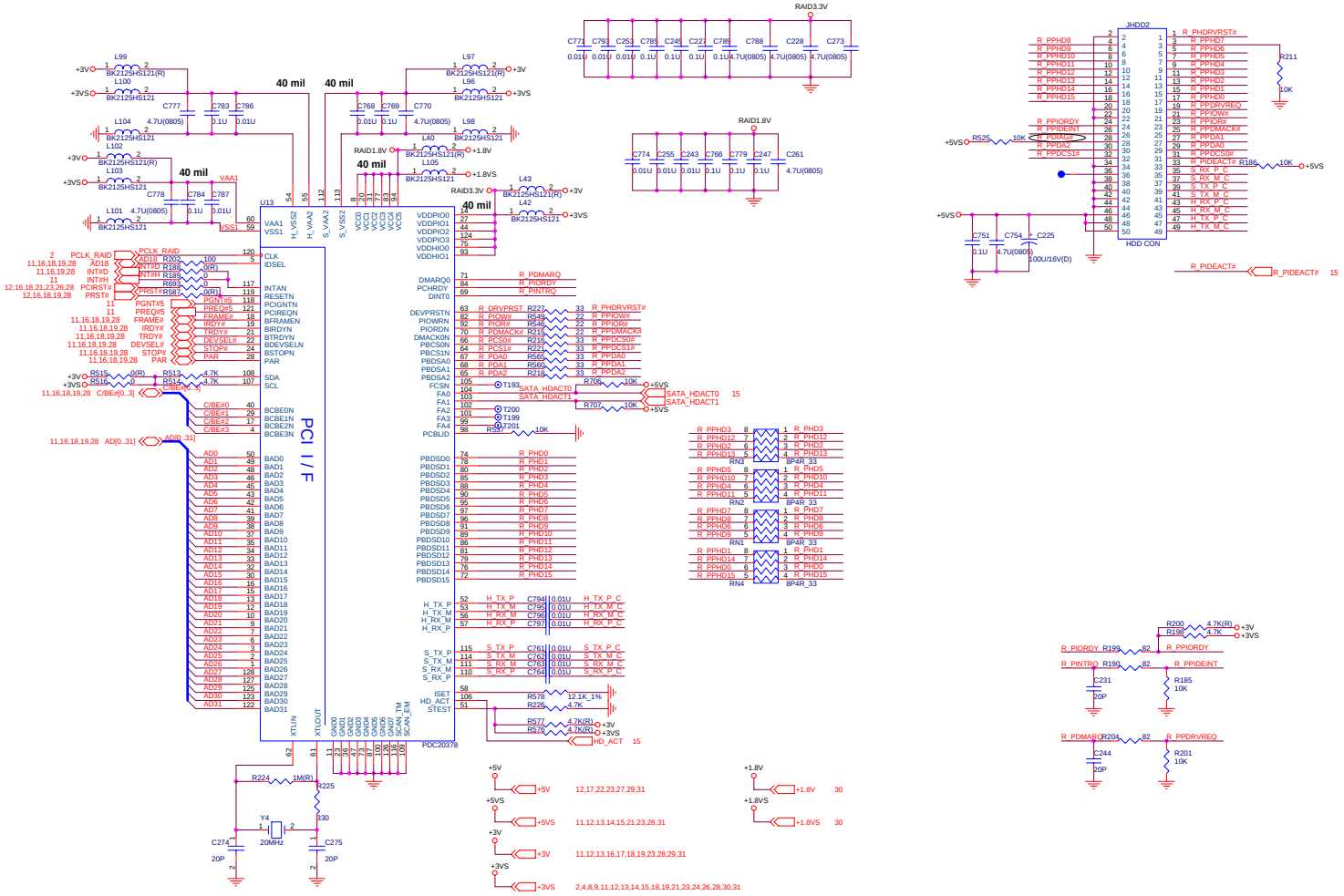

Sheet 20 of 37
SATA RAID
PDC20378

LPC Super I/O NS87393

Sheet 21 of 37
LPC Super I/O
NS87393

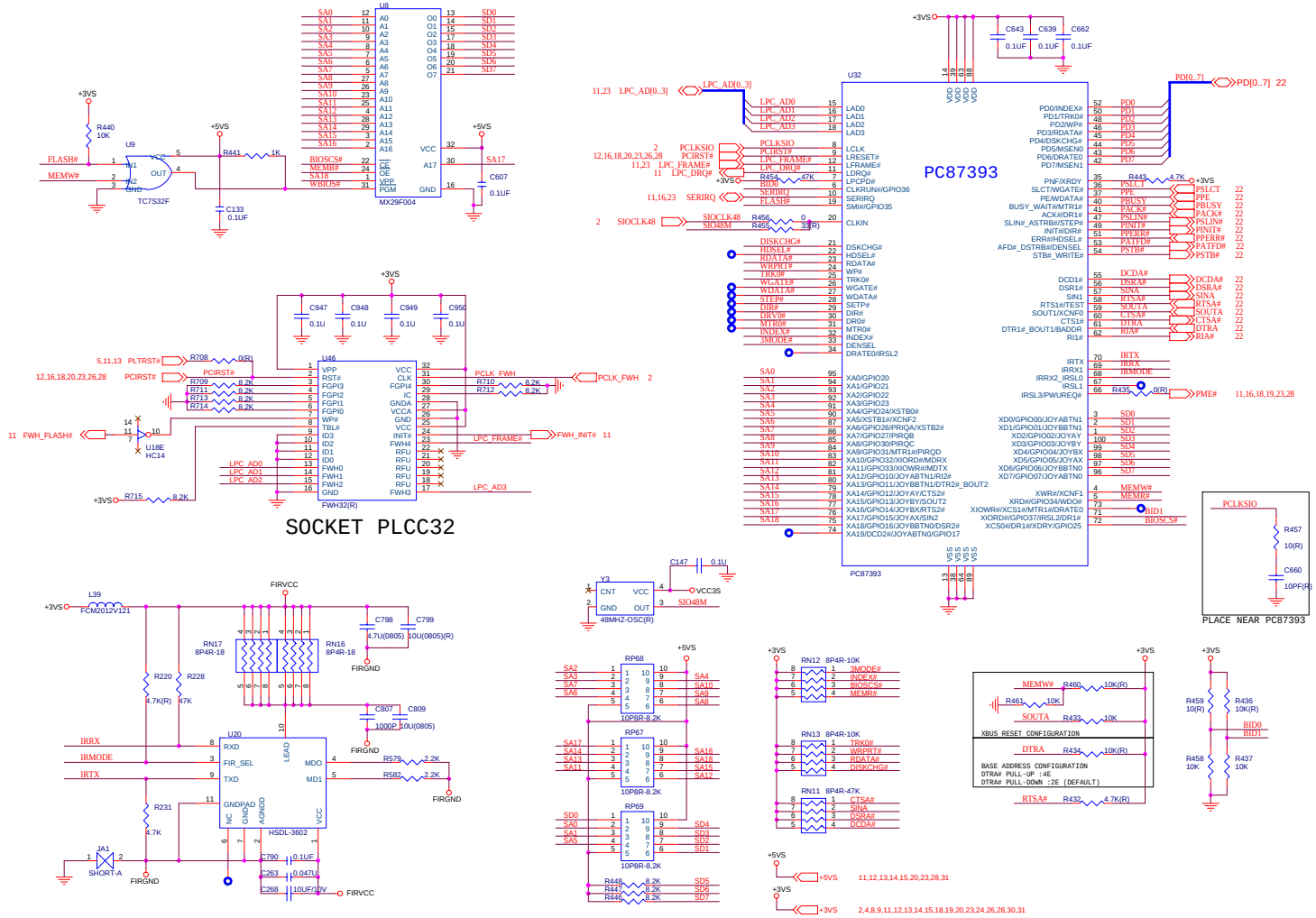

LPT / COM Port CON / Thermistor

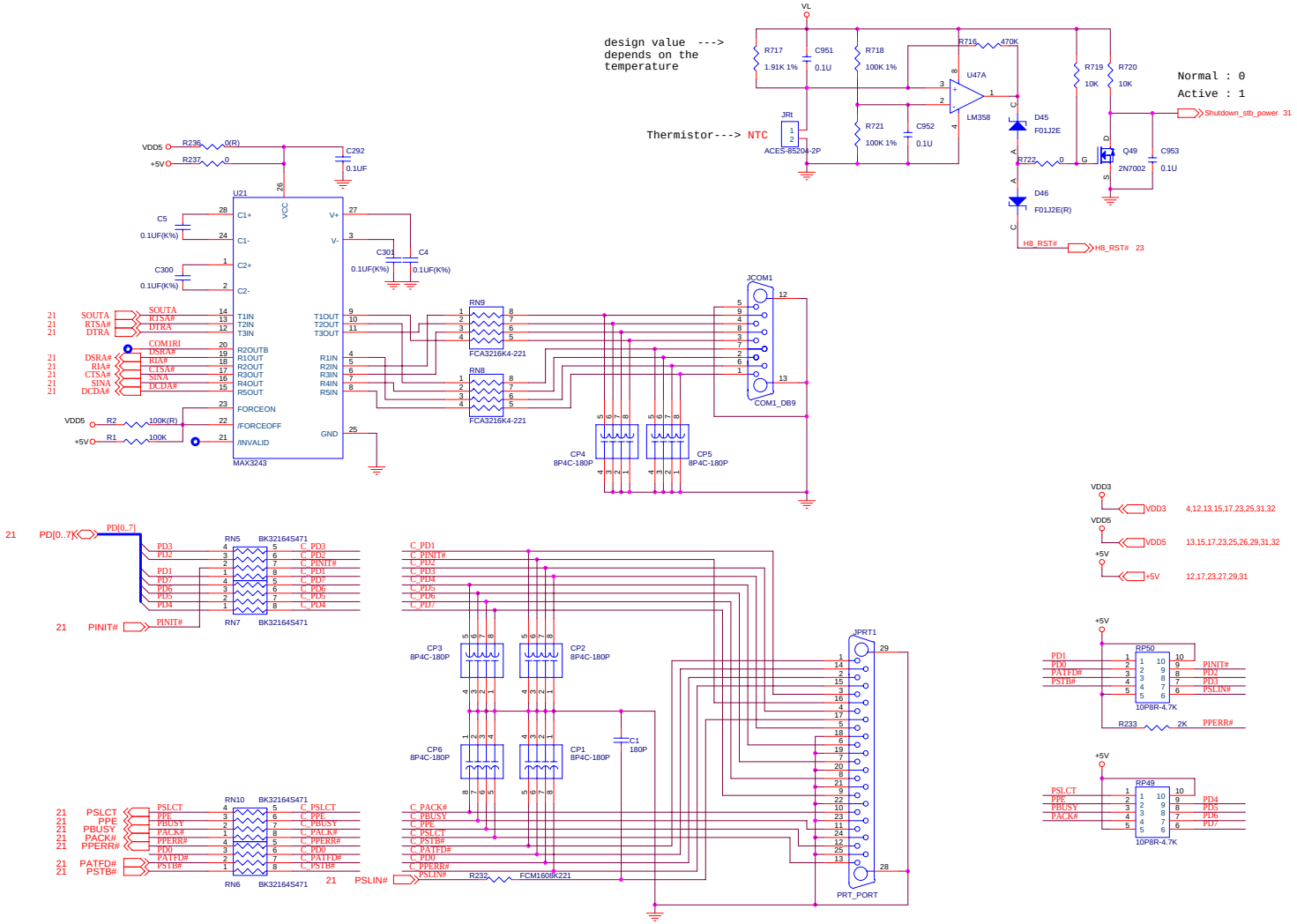

Sheet 22 of 37
LPT / COM Port CON / Thermistor

LPC H8

Sheet 23 of 37
LPC H8

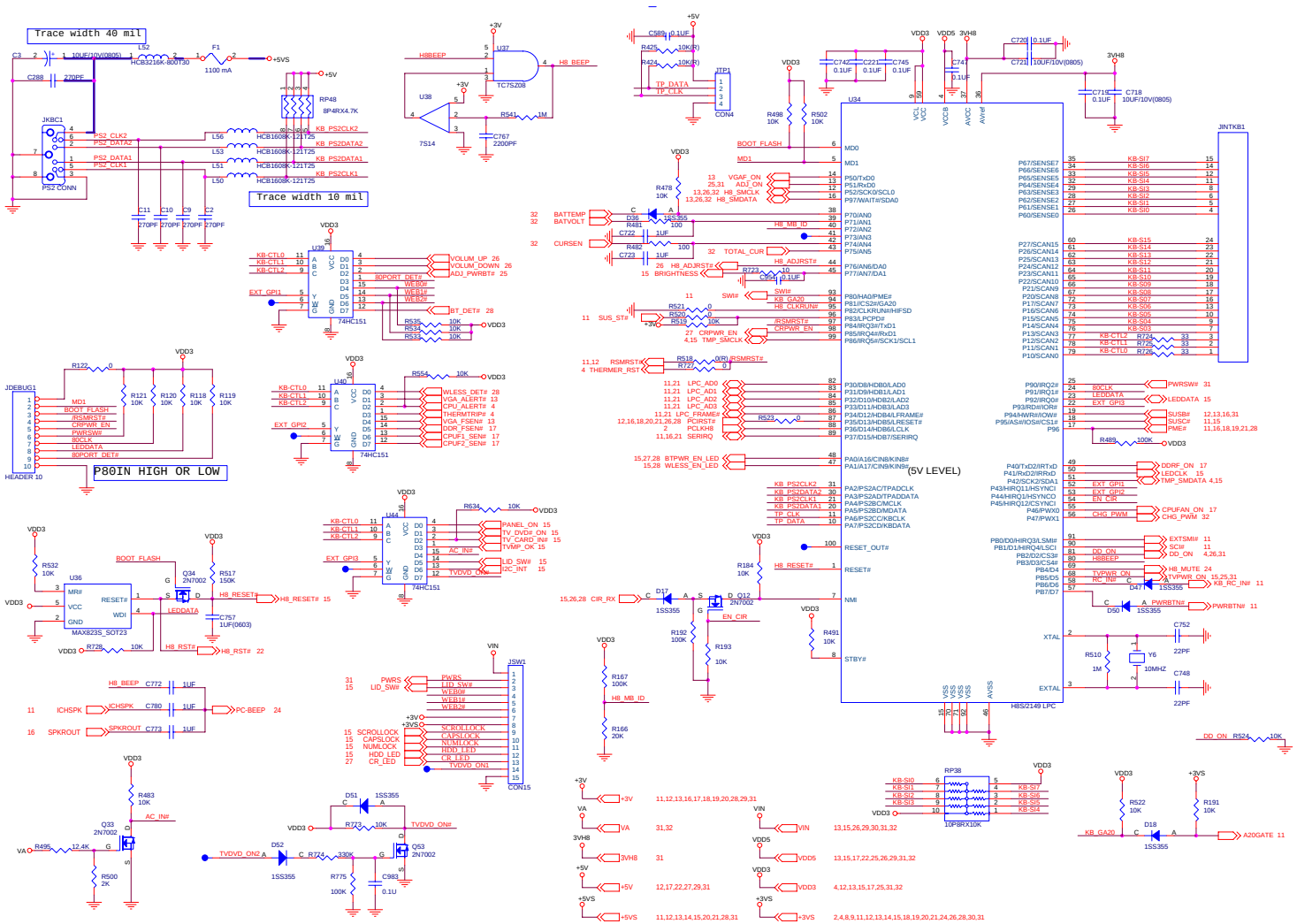

CODEC ALC880

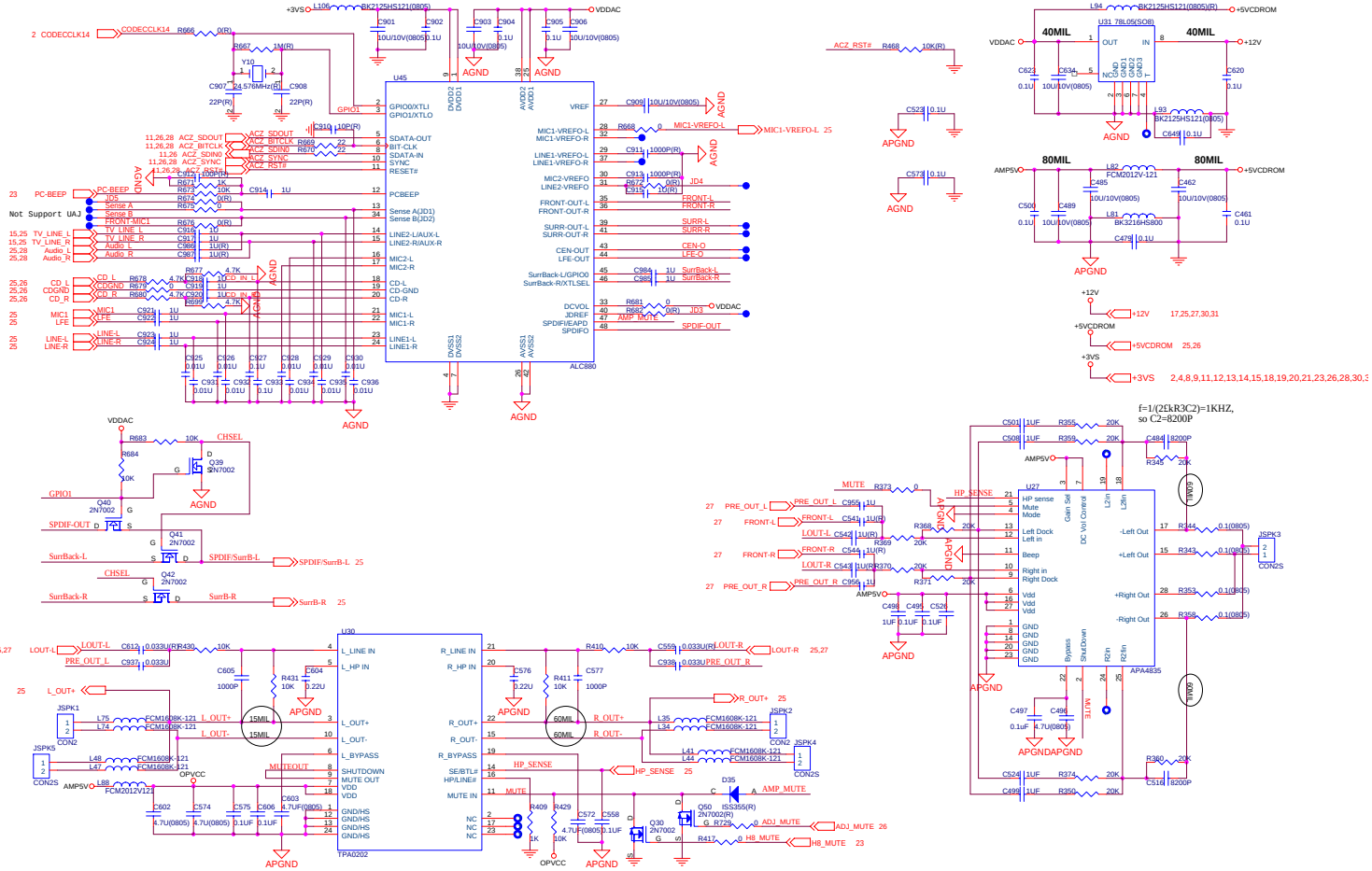

Sheet 24 of 37
CODEC ALC880

Audio Jack & ADJ Power

Sheet 25 of 37
Audio Jack & ADJ Power

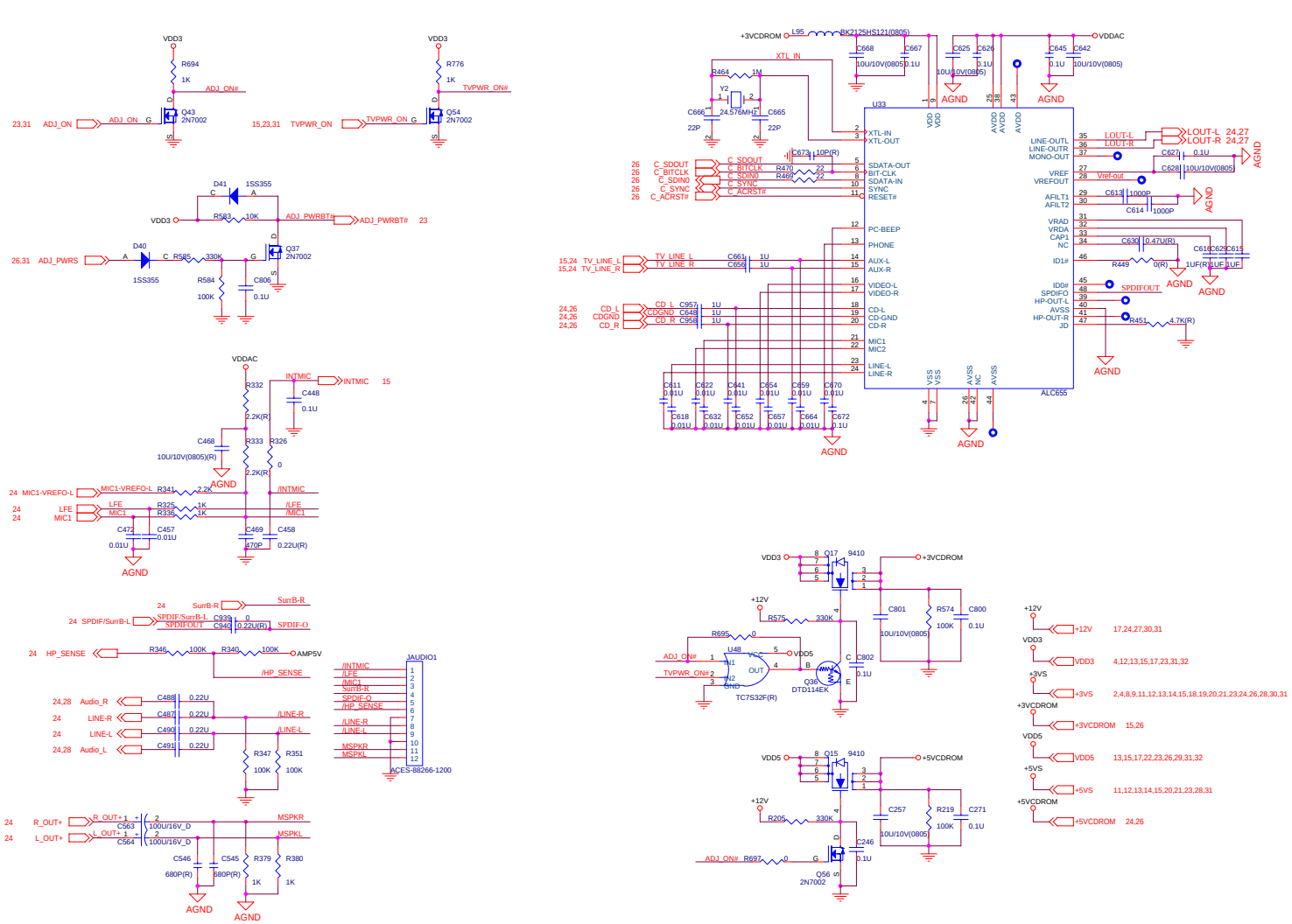

Audio DJ BBVL+ Controller

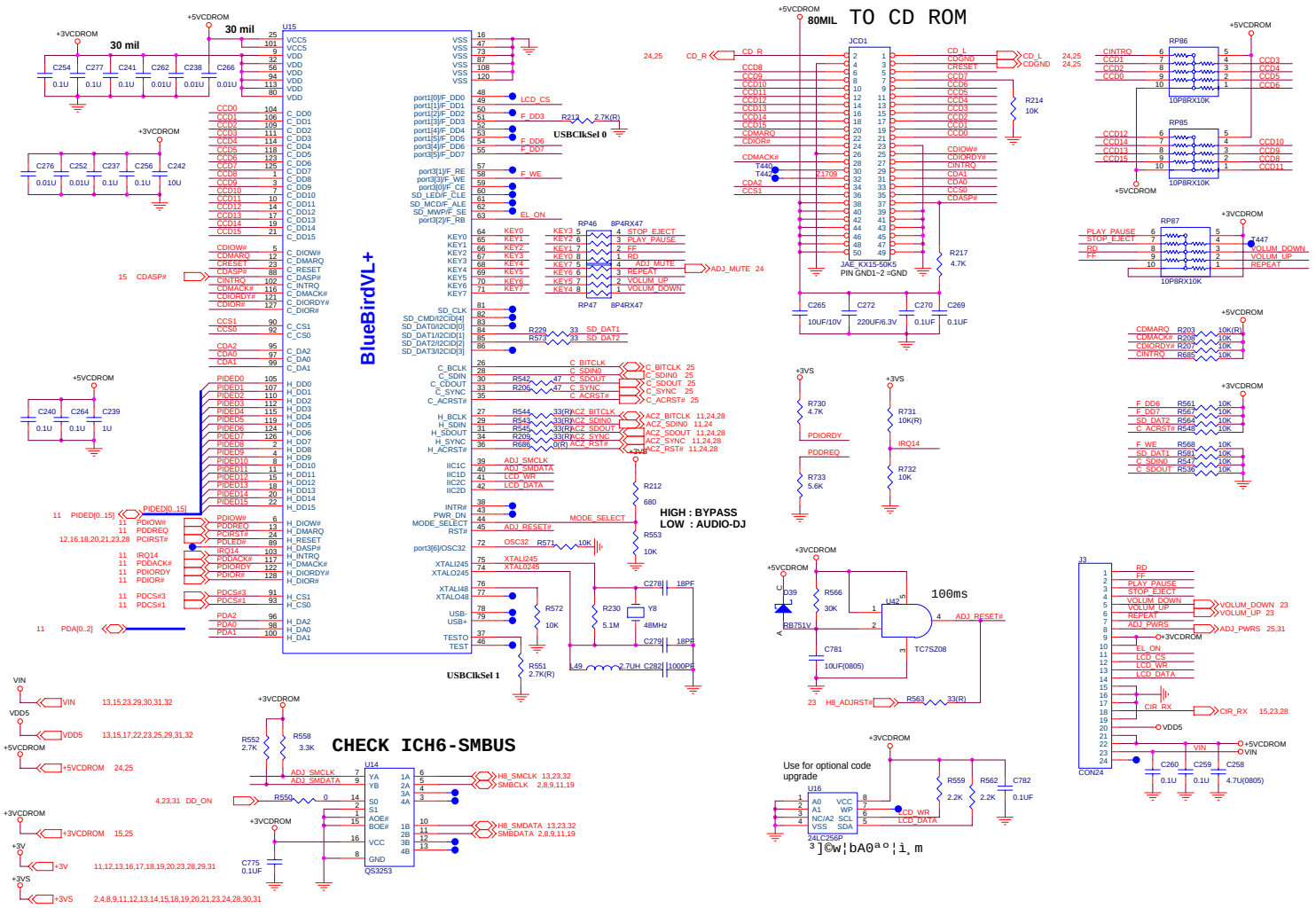

Sheet 26 of 37
Audio DJ BBVL+ Controller

USB / CR / CCD Con / SRS

Sheet 27 of 37
USB / CR / CCD CON / SRS

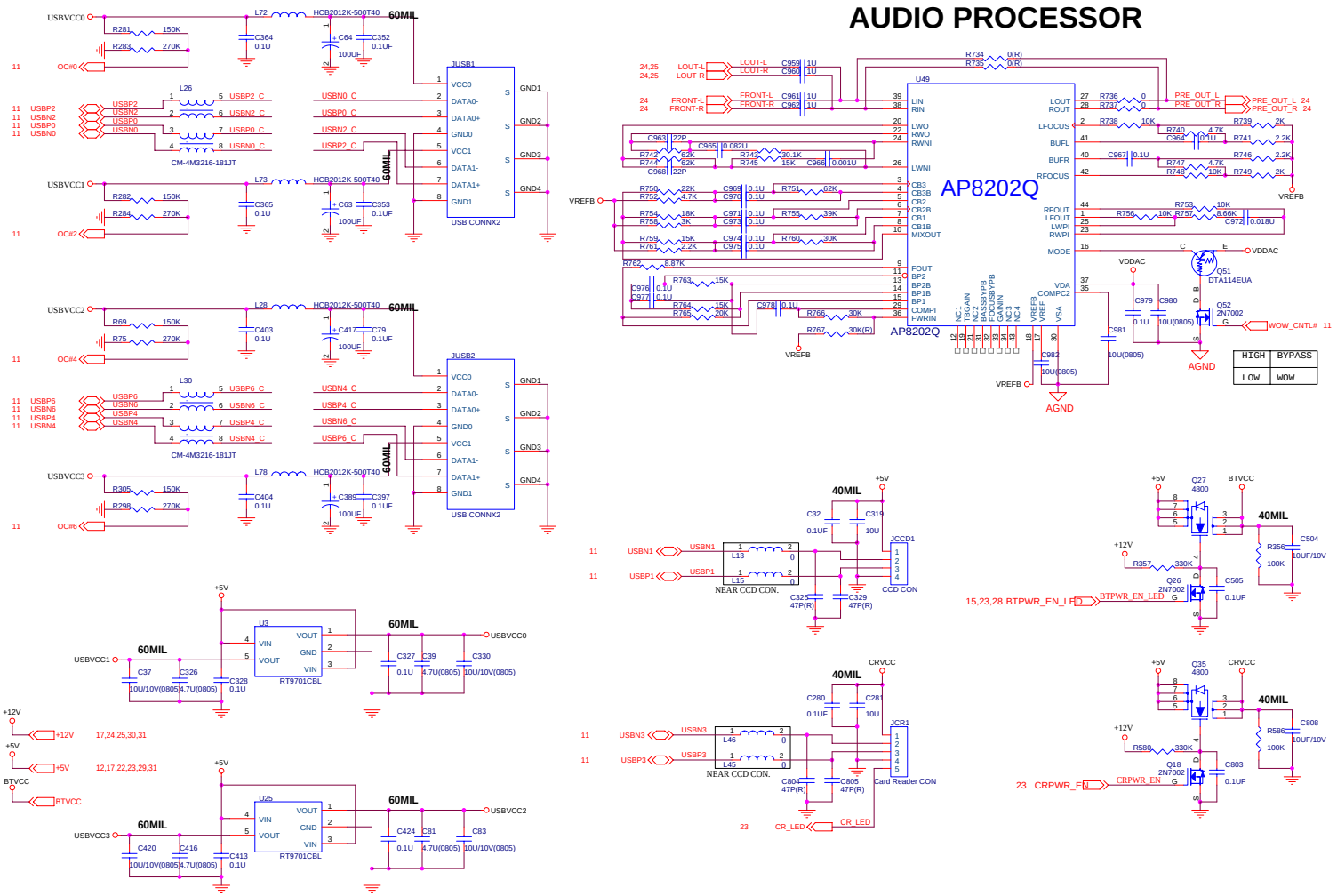

Mini-PCI / NC / MDC / BT Con

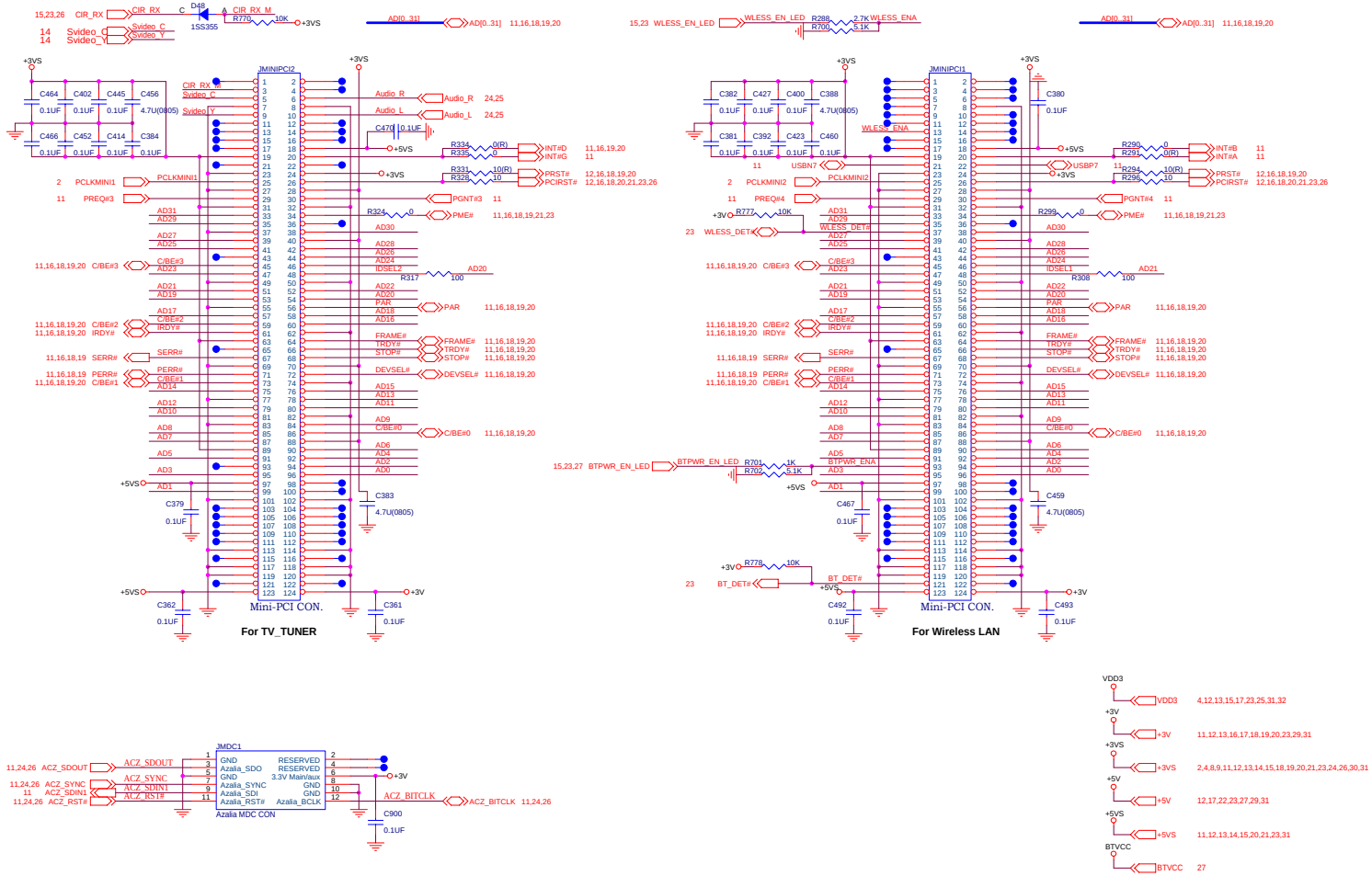

Sheet 28 of 37
Mini-PCi / NC / MDC
/ BT Con

VCORE

Sheet 29 of 37
VCORE

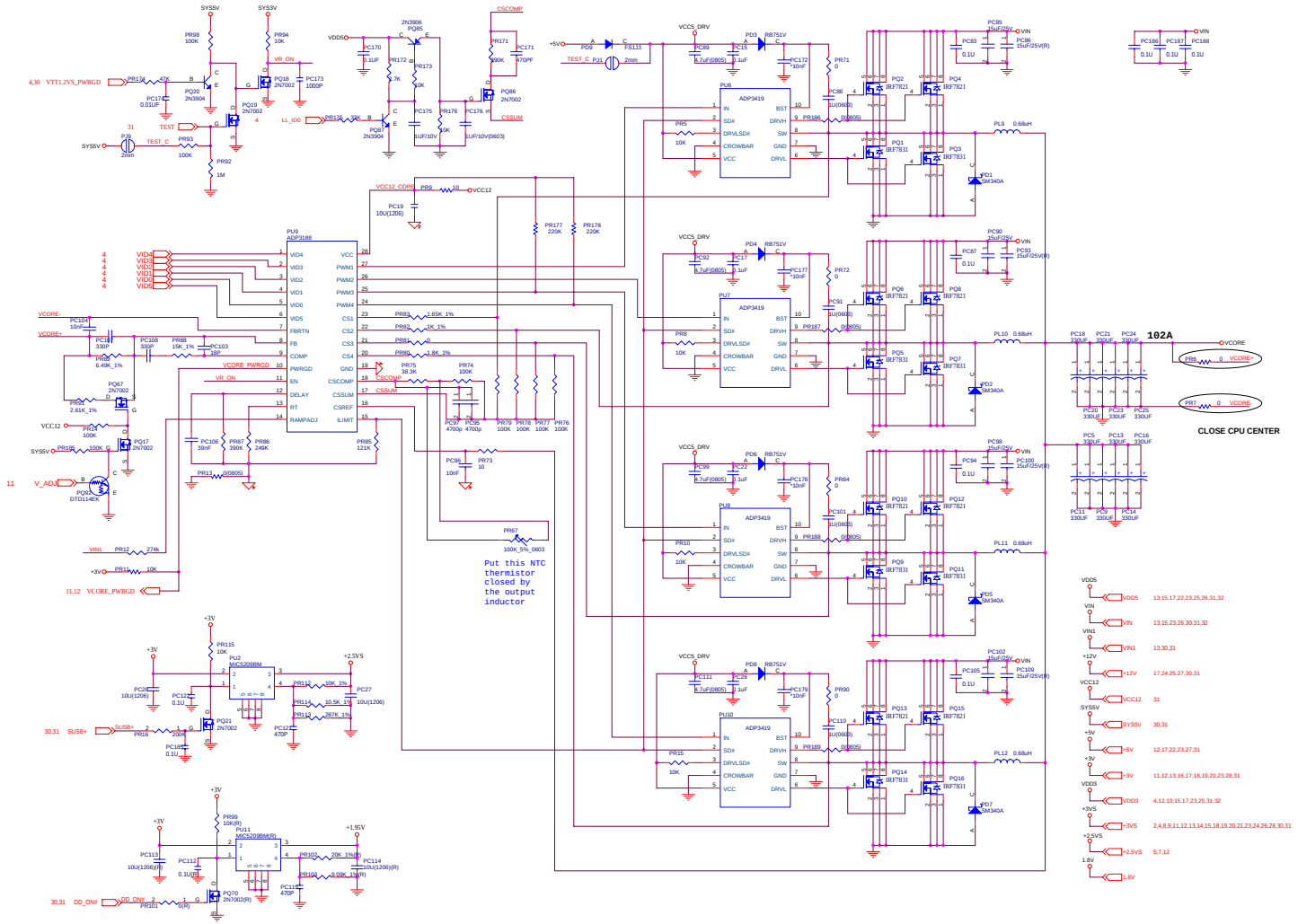

DDR Power

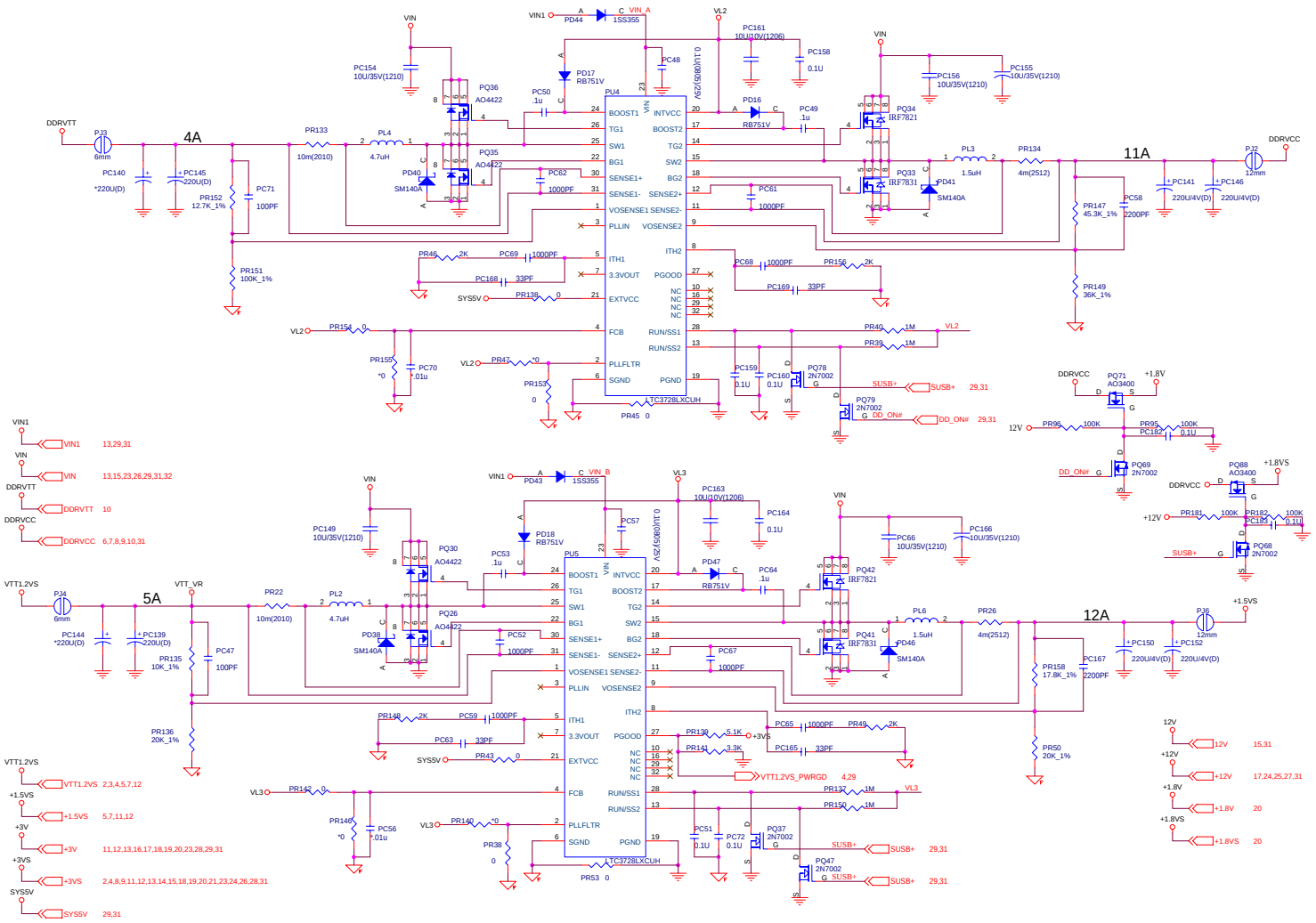

Sheet 30 of 37
DDR Power

System Power

Sheet 31 of 37
System Power

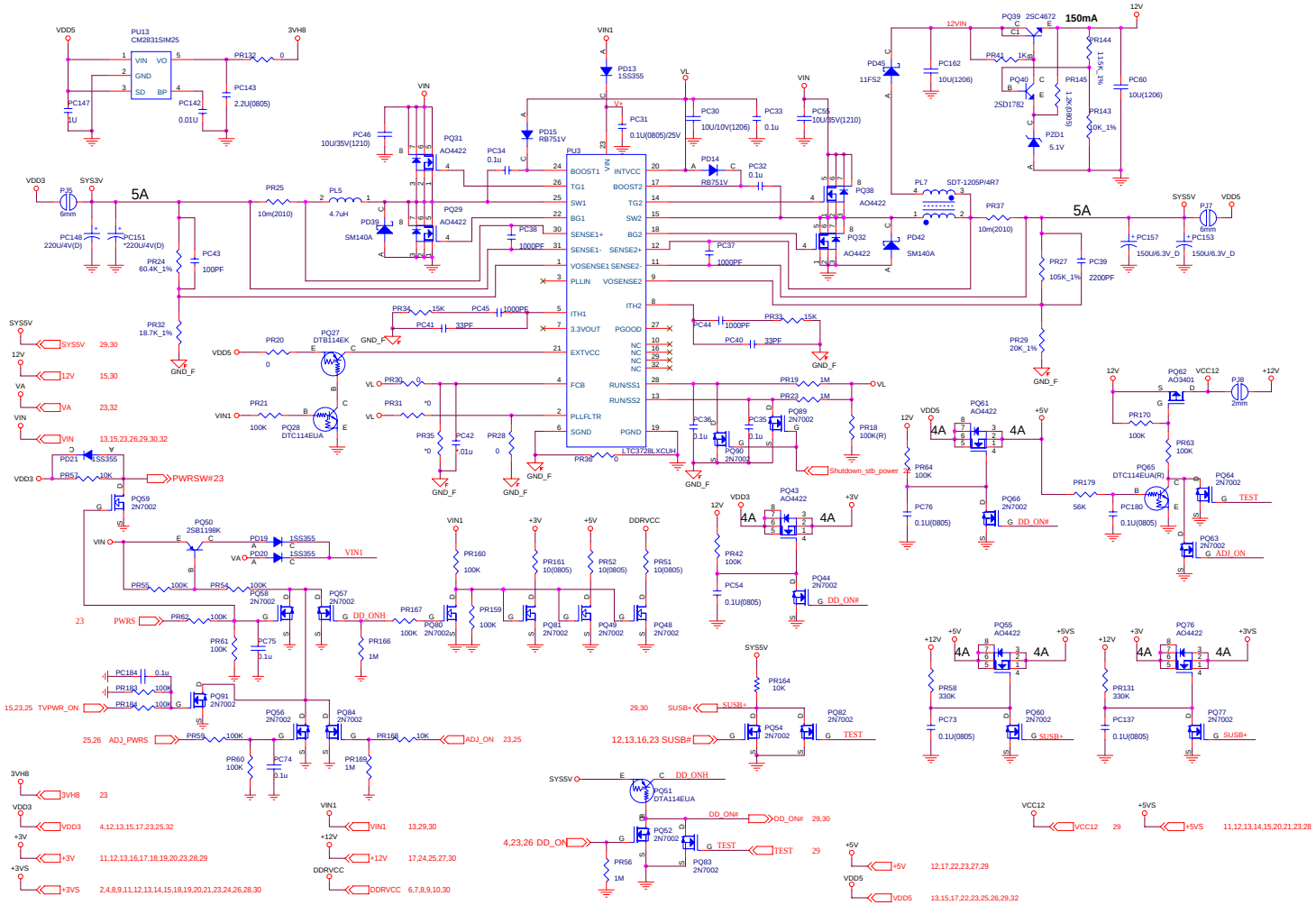

Charger

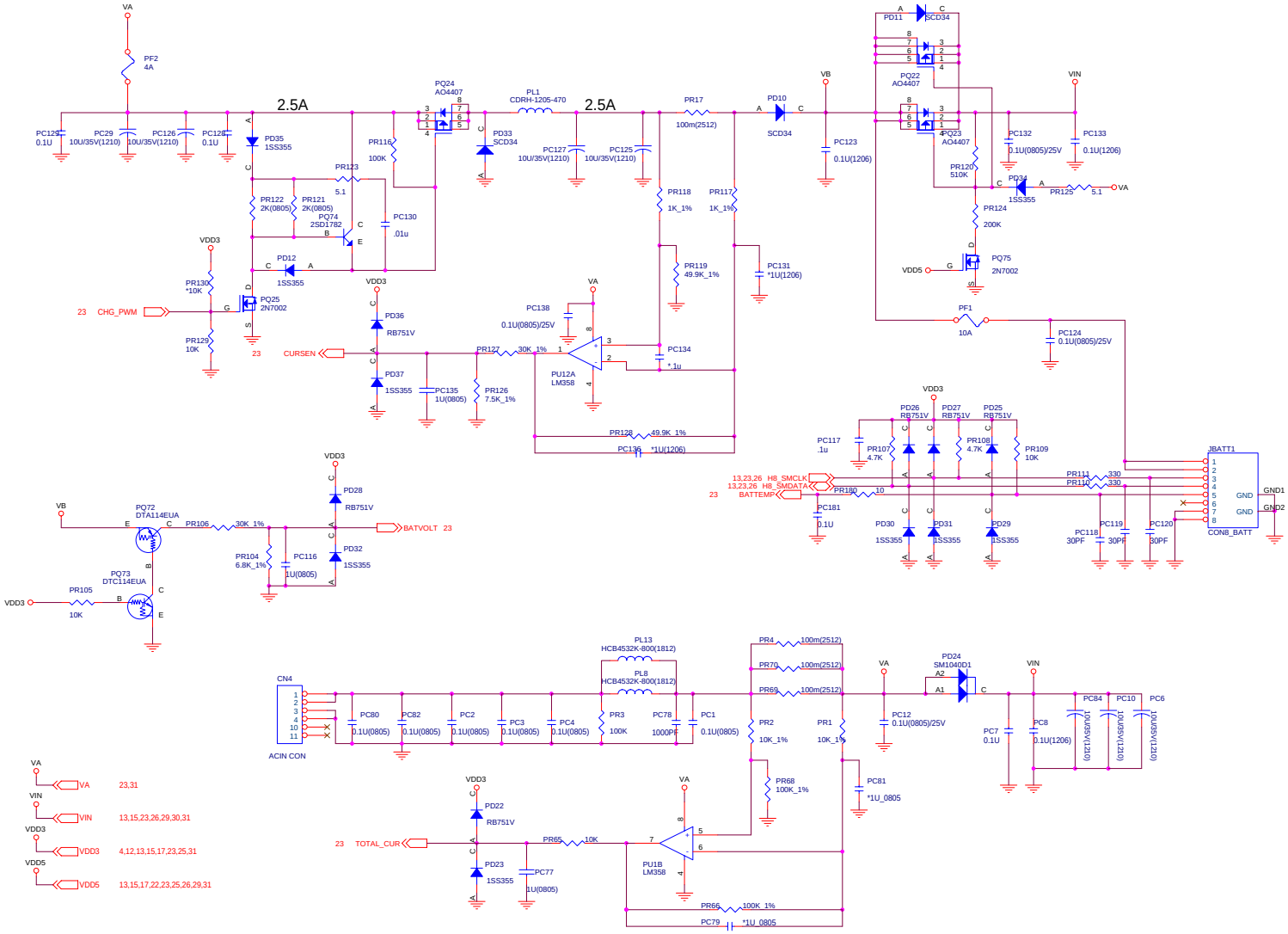

Sheet 32 of 37
Charger

Audio Board

Sheet 33 of 37
Audio Board

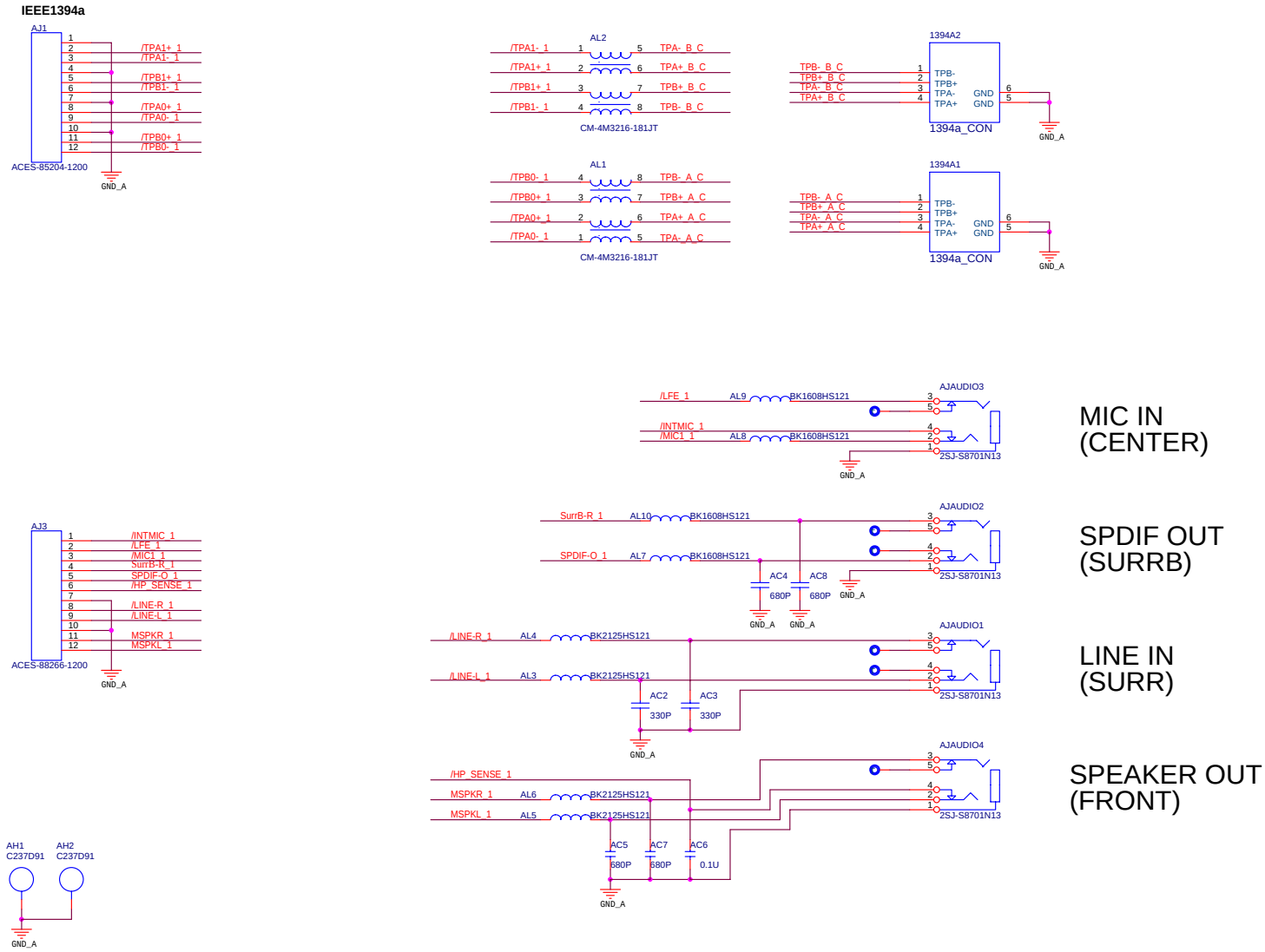

Audio DJ Board

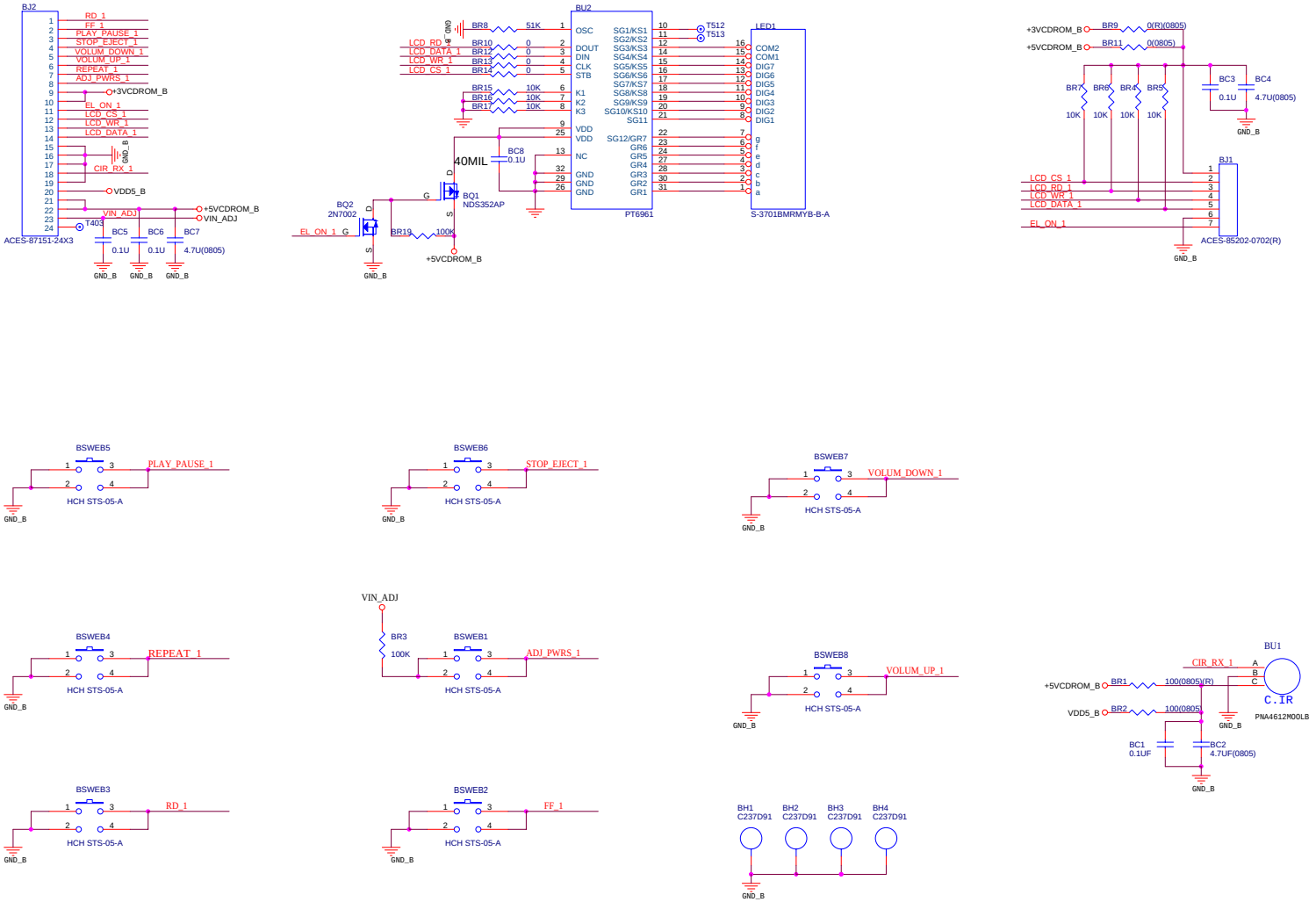

Sheet 34 of 37
Audio DJ Board

CD-ROM Board

Sheet 35 of 37
CD-ROM Board

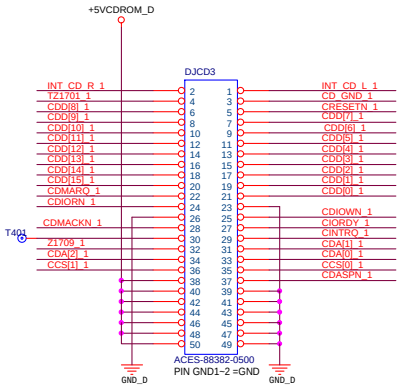

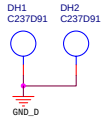

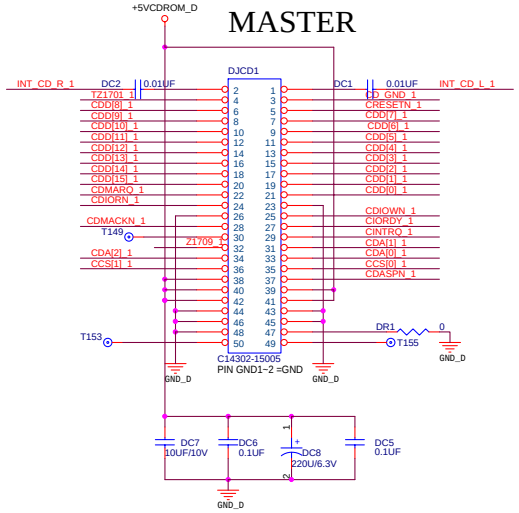

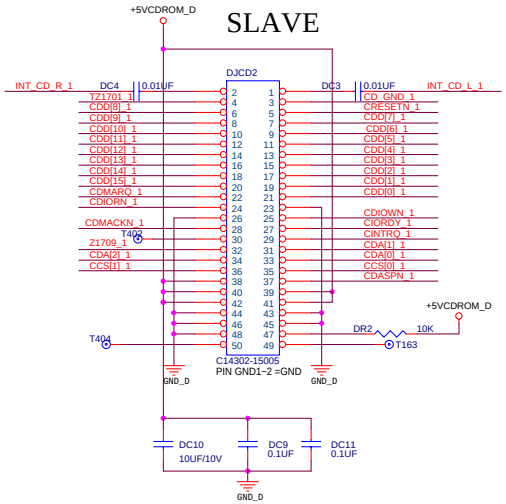

A4

Click Board

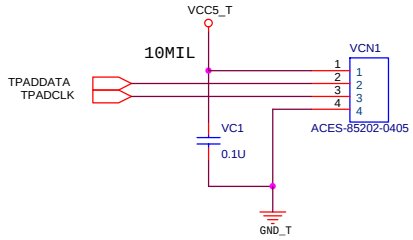

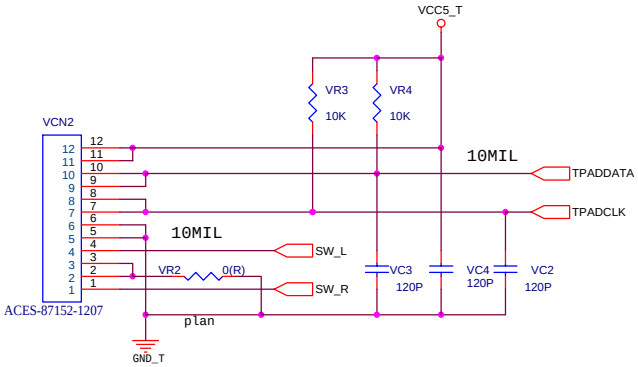

Sheet 36 of 37
Click Board

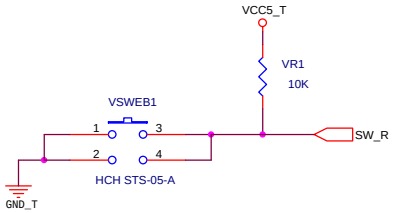

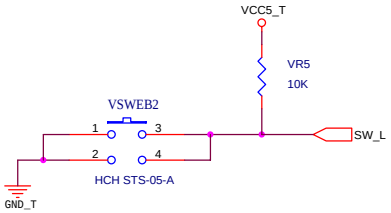

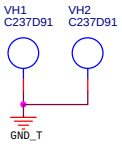

Switch Board
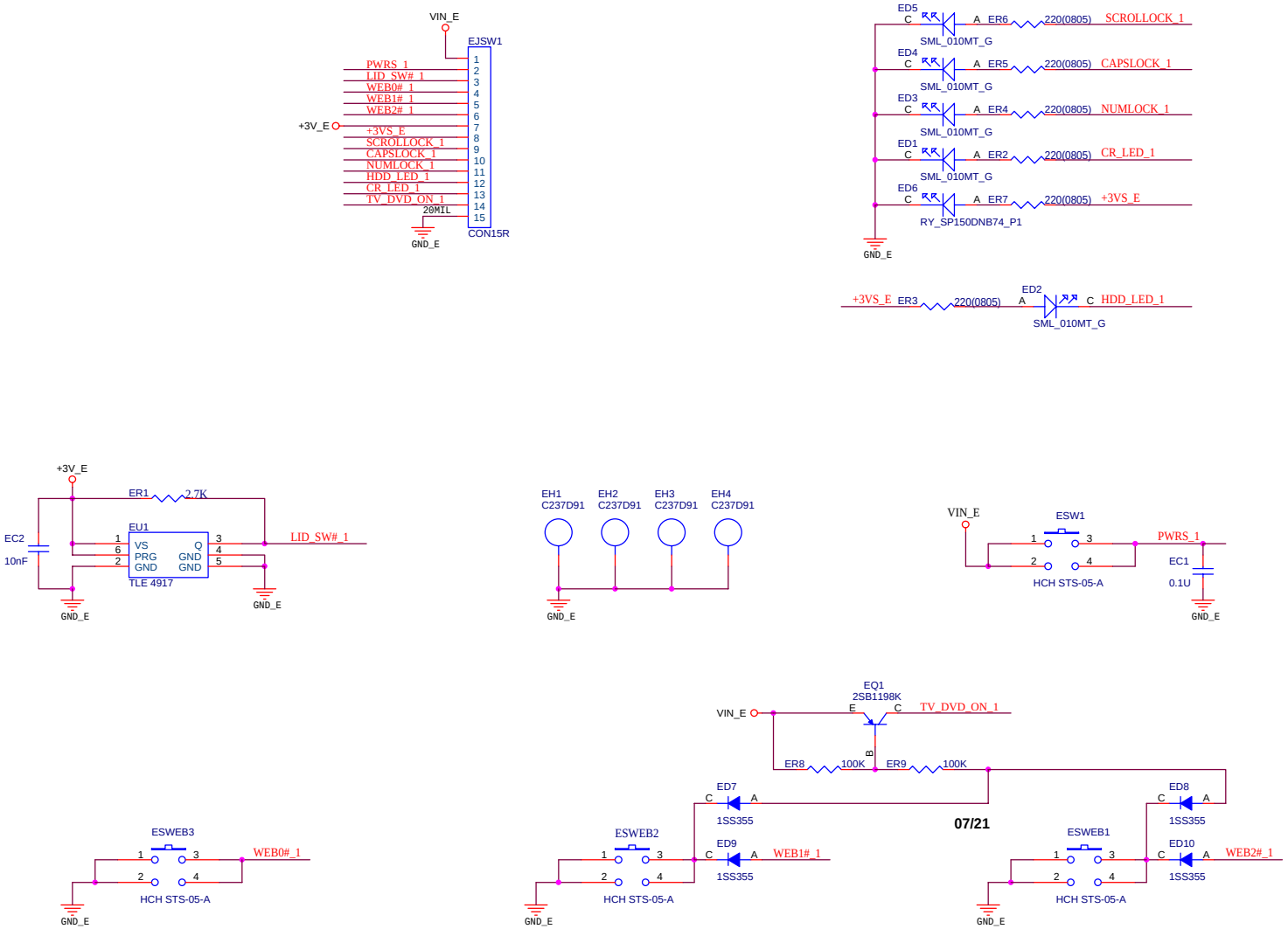
Sheet 37 of 37
Switch Board